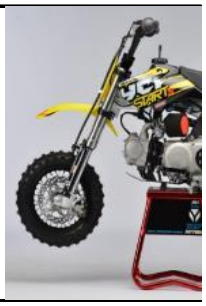

Handle bar assembly

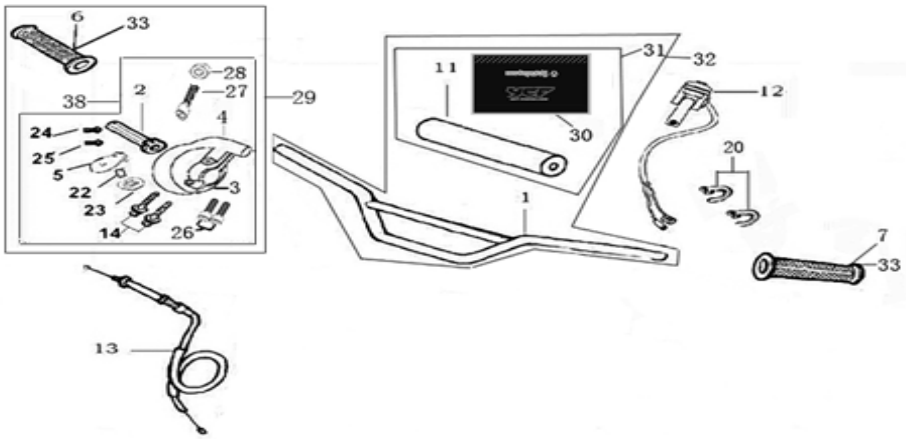

N°	Ref.	Description	Français	Qty/ Bike	MODEL
1	YC110-0101	Handle Bar START Chromelly L=740mm	Guidon chromolly START L=740mm	1	F88s12-16/F88se16/F12512-16/F125s12-16/F125se16/SM125s12-16 / P88s13-16/P12513-16/P15013-16
2	YC110-01021-01	YCF Throttle Body 2012 BLACK	plastique poignée de gaz YCF 2012 NOIR	1	ALL BIKES 2012-2016
3	YC110-01021-04	YCF Lower Throttle Body Housing 2012	dessous poignée gaz YCF 2012	1	50A12-16/F88s12-16/F88se16/F12512-16/F125s12-16/F125se16/P88s12-15/P12514-16/SM125s14-16
4	YC110-01021-03	Upper Throttle Body Housing YCF 2012	dessus poignée gaz YCF 2012	1	ALL BIKES 2012-2016
5	YC110-01021-02	Upper Throttle Body Housing Cover YCF 2012	plastique du dessus poignée gaz YCF 2012	1	ALL BIKES 2012-2016
6	YC110-01-01-GY	YCF Right Grip GREY	poignée caoutchouc droite YCF GRISE	1	ALL BIKES2012-2016
7	YC110-01-02-GY	YCF Left Grip GREY	poignée caoutchouc gauche YCF GRISE	1	ALL BIKES2012-2016
11	YC110-0110-01	Bar pad for Chromolly Handlebar L=250 mm	Mousse guidon pour guidon Chromolly L=250 mm	1	F88s12-16/F88se1516/F12512-16/F125s12-16/F125se1516/P88s13-15/P12513-16/P15012-16/SM125s12-16

12	YC110-0105-01	Kill Switch ON/OFF L=580mm	Coupe circuit on off L=580mm	1	ALL BIKES2012-16（BUT50A/SPIII)
13	YC110-0106-04	Throttle Cable L=710mm A+B=125	Cable gaz L=710mm A+B=125	1	F88s1516/F88se1516
14	GB5787-M6×22-G	Hex. Bolt with Flanged Face M6X22	vis M6X22	2	ALL BIKES2012-16(BUT50A)
20	YC110-01-03-BK	Tape 150mm BLACK	colier maintien cable 150mm NOIR	2	ALL BIKES
20	YC110-01-03-WH	Tape 150mm WHITE	colier maintien cable 150mm BLANC	2	ALL BIKES
20	YC110-01-05-BK	Tape 350mm BLACK	colier maintien cable 350mm NOIR	5	ALL BIKES
22	YC110-0102-08	YCF Throttle cable Bearing Φ8×Φ16×5mm	Roulement poignee gas YCF Φ8×Φ16×5mm	1	ALL BIKES2012-2016
23	YC110-0102-07	YCF Throttle cable guide pulley plastic Φ12×Φ16×Φ28×8mm	Roulette plastique Poignee Gas YCF Φ12×Φ16×Φ28×8mm	1	ALL BIKES2012-2016
24	GB819-M4×12	Plus screw M4×12	vis M4×12	1	ALL BIKES2012-2016
25	GB819-M4×20	Plus screw M4×20	vis M4×20	1	ALL BIKES2012-2016
26	GB70-M6×20-B	Hex. Bolt M6x20 BLACK	vis M6x20 NOIR	2	ALL BIKES2012-2016
27	GB70-M5×12	Hex. Bolt M5×12	vis M5×12	1	ALL BIKES2012-2016(BUT50A)
30	YC110-012021-BK	PVC for Bar Pad suitable Chromolly Handlebar 246mm×156mm 2013 BLACK	PVC mousse guidon Chromolly 246mm×156mm 2013 NOIR	1	F88s12-16/F88se1516/F12512-16/F125s12-16/F125se1516/P88s13-15/P12513-16/P15012-16/SM125s12-16
31	YC110-0132BK	Complete Bar Pad for Chromolly Handlebar L=250mm 2013 BLACK	Mousse guidon complete pour guidon Chromolly L=250mm 2013 NOIR	1	F88s12-16/F88se1516/F12512-16/F125s12-16/F125se1516/P88s13-15/P12513-16/P15012-16/SM125s12-16
32	GA02-BK	Chromelly Handle Bar with bar pad and pvc START / PILOT / SM125s 2013	Guidon chromolly complet avec Mousse et Pvc START / PILOT / SM125s 2013	1	F88s12-16/F88se1516/F12512-16/F125s12-16/F125se1516/P88s13-15/P12513-16/P15012-16/SM125s12-16
33	PPC010-GY	YCF set of grip GREY	Paire de poignée caoutchouc YCF GRISE	1	ALL BIKES2012-2016
38	YC110-01021-N	YCF Throttle Assy. 2012 without grip（with YC110-0102-08 1EA）	Poignee gaz reglable YCF 2012 nue	1	ALL BIKES12-13(BUT50CC)/F88s14-16/F88se1516/F12514-16/F125s14-16/F125se1516/P88s1415/P12514-16/SM125s14-16
Steering stem assembly					

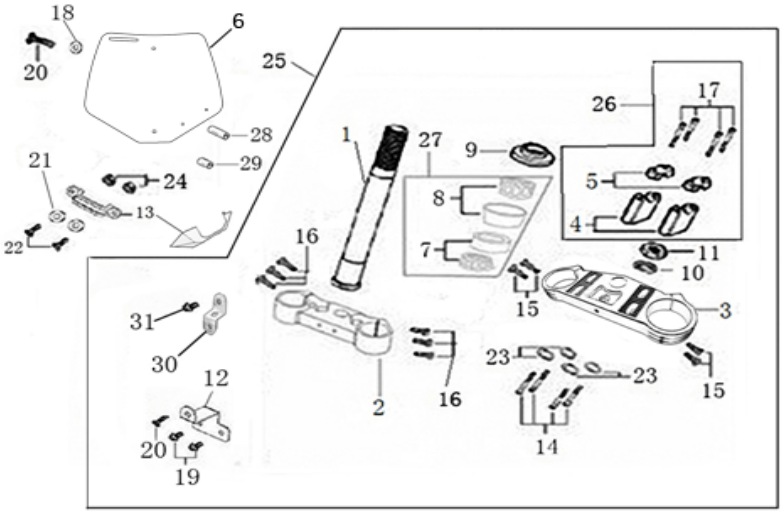

N	Ref.	Description	Français	Qty/ Bike	MODEL
1	YC88-0201-02	Steering stem 213 mm	tige colonne direction 213 mm	1	5011/F88s12-16/F88se1516
2	YC110-0202-39-BK	Lower triple clamp 160 mm φ48mm 2014 MATT BLACK	té fourche inferieur 160 mm φ48mm NOIR MAT	1	F88s14-16/F88se1516/F12514-16/F125s14-16/F125se1516/SM125s14-16/SM1501516/SP114
3	YC110-0201-39-BK	Top Triple Clamp160mm φ45mm 2014 (not adjustable)MATT BLACK	té fourche supérieur 160 mm φ45mm (non ajustable) 2014 NOIR MAT	1	F88s14-16/F88se1516/F12514-16/F125s14-16/F125se1516/SM125s14-16/SM1501516/SP114
4	YC110-0203-23	Lower Bar Mount CNC START type, not adjustable φ22.2 / height 55 mm BLACK	Pontet guidon inférieur non ajustable type START φ22.2 / hauteur 55 mm NOIR	2	ALL BIKES2012-2016(BUT50A/SP1/SP2/SP3)
5	YC110-0202-04	Top Bar Mout CNC Φ22.2 mm/height 18mm START Type BLACK	pontet guidon supérieur Φ22.2 mm Type START NOIR	2	ALL BIKES2013-15/ALL BIKES2016(BUTSP3)
6	YC110-0212-02YE	YCF Front Number Plate Yellow	plaque avant Jaune YCF	1	F88s16
7	297-41/24	Lower Taper roller bearing 41/24	roulement inférieur 41/24	1	50A12-16/F88s13-16/F88se1516
8	297-41/22.5	Top Taper roller bearing 41/22.5 R START 08	roulement supérieur 41/22.5	1	50A12-16/F88s13-16/F88se1516
9	YC110-02-09	Top nut for steering φ52	écrou crantellé colonne direction φ52	1	ALL BIKES2012-2016
10	YC110-02-10	Washer for steering stem nut Φ22.5×Φ36×0.7	joint colonne direction Φ22.5×Φ36×0.7	3	ALL BIKES2012-2016
11	YC110-02-11	Nut for steering stem M22	écrou supérieur colnne direction M22	1	ALL BIKES2012-2016
12	YC110-0213-03	Number plate bracket long L=60mm H=53mm	support plaque avant L=60mm H=53mm	1	88P12/RS12/RSSA12/RSP12/SM12512/SM15012/F12513/F88s13-16/F88se1516/P88s13-15

13	YC110-02-14-WH	Break Line Retainer White	guide durite sur plaque avant Blanc	1	ALL BIKES2012-2013/50A14-16/F88s14-16/F88se1516/P88s1415
14	GB70-M8×30	Stud screw M8X30	vis M8X30	4	ALL BIKES2012-16（BUT50A）
15	GB70-M6×25	Stud screw M6X25	vis M6X25	4	ALL BIKES2012-16（BUT50A）
16	GB70-M6×25	Stud screw M6X25	vis M6X25	4	ALL BIKES2012-16（BUT50A）
17	GB70-M8×25	Stud screw M8X25	vis M8X25	4	ALL BIKES2012-16（BUT50A）
18	GB97-Φ6-W	flat washer φ6	rondelle φ6	1	ALL BIKES2012-16
19	GB5787-M6×16-W	Hex. Bolt with Flanged Face M6X16	vis M6X16	2	ALL BIKES2012-2016
20	GB9074.5-M6×16-W	Plus screw M6X16 (for bottom front No plate)	vis m6x16 bas plaque No avant	1	50A14-16/F88s14-16/F88se1516/P88s1415
20	GB9074.5-M6×25-W	Plus screw M6X25 (for top front No plate)	vis m6x25 haute plaque No avant	1	50A14-16/F88s14-16/F88se1516/P88s1415
21	GB97-Φ4-W	flat washer φ4	rondelle φ4	2	ALL BIKES2012-16
22	GB818-M4×10-W	Plus screw M4×10	vis M4×10	2	ALL BIKES2012-16
23	GB93-Φ8-W	Spring washer Φ8mm	rondelle Φ8mm	4	ALL BIKES2012-2016
24	GB6170-M4-W	Nut M4	ecrou M4	2	50A14-16/F88s14-16/F88se1516/P88s1415
25	YC88-02-041-BK	Complete Triple Clamp (TOP45 / BOTTOM 48) F88s 2014 MATT BLACK	Te Fourche Complet (TE SUP. 45 / TE INF.48 Type F88s 2014 NOIR MAT	1	F88s14-16/F88se1516/
26	YC110-0203-05	Set of Bar mount not adjustable φ22.2mm/bottom 55mm START Type BLACK （with GB70-M8×25 4EA+GB70-M8×30 4EA+GB93-Φ8-W 4EA）	jeu pontet guidon non ajustable φ 22.2mm / pontet bas 55mm Type START NOIR	1	ALL BIKES2012-2016(BUT50A/SP1/SP2/SP3)
27	KRDIRECTION41-2	set of bearing for steering 41/24、41/22.5	kit rlt colonne direction 41/24、41/22.5	1	50A12-16/F88s13-16/F88se16
28	FB13-9×10×17-W	Front Number plate spacer (Top) φ 8.5×10×17	entretoise Plaque numero avant (Haut) φ 8.5×10×17	1	ALL BIKES2013/50A14-16/F88s14-16/F88se1516/P88s1415
29	FB13-9×10×6-W	Front Number plate spacer (Bottom) φ 8.5×10×5.5	entretoise Plaque numero avant (Bas) φ 8.5×10×5.5	1	50A12-16/F88s12-16/F88se1516
30	YC110-0213-04	Number plate bracket long TOP BLACK	support plaque avant NOIR	1	50A13-16/F88s13-16/F88se1516
31	GB5787-M6×10-W	Hex. Bolt M6X10	vis M6×10	1	50A12-16/F88s13-16/F88se16
Front Fender					

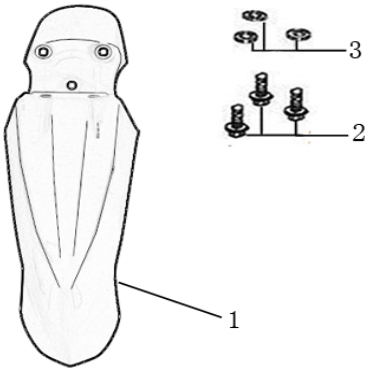

N	Ref.	Description	Français	Qty/ Bike	MODEL
1	YC50-031YE	Complete Front Fender YCF50 YELLOW	Gb avant Complet YCF50 JAUNE	1	50A14/F88s16
2	GB5787-M6×20-W	Hex. Bolt with flanged M6X20	vis M6X20	3	ALL BIKES
	GB96-Φ6-W	Washer φ6×φ18mm	Rondelle φ6×φ18mm	3	ALL BIKES
3	YC110-03-01	Rubber washer Φ6×Φ18×4mm	caoutchouc Φ6×Φ18×4mm	3	ALL BIKES

Front & Rear absorber

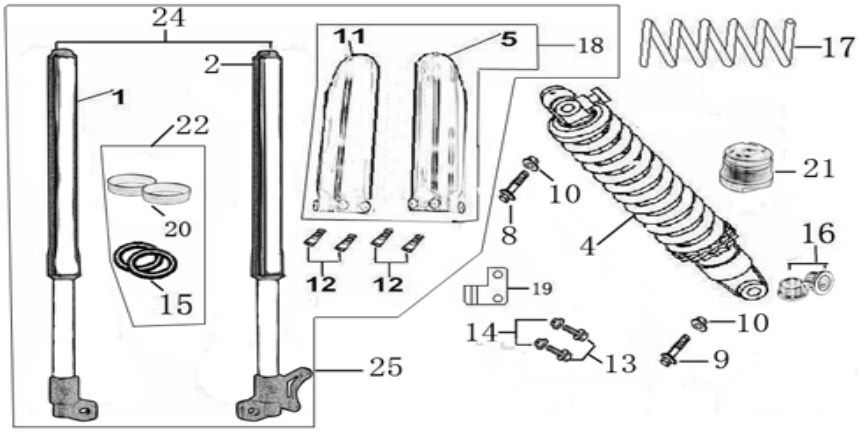

N	Ref.	Description	Français	Qty/ Bike	MODEL
1	YC110-0401-02	Front right fork 600mm (not adjustable) GREY	Tube fourche droit 600mm GRIS	1	F88s13-16/F88se1516
2	YC110-0402-18	Front left fork 600mm (not adjustable) 2015 GREY	Tube fourche gauche 600mm 2015 GRIS	1	F88s1516/F88se1516
4	YC110-0404-15	Shock absorber START F88s 265mmx850lbs YELLOW	Amortisseur START F88s 265 x 850lbs JAUNE	1	F88s13-16/F88se1516
5	YC88-04-01-BK	Left front fork protection 600LB	protection fourche gauche 600 LB	1	F88s12-16/F88se1516
8	GB5787-M12×50-W	Hex.bolt with flanged face M12x1.25x50	vis M12x1.25x50	1	F88s13-16/F88se1516/F12513-16/F125s13-16/F125se1516/SM125s13-16
9	GB5787-M12×45-W	Hex. Bolt with flanged M12X45	vis M12X45	1	F88s13-16/F88se1516/F12513-16/F125s13-16/F125se1516/P88s13-15/P12513-16/P15013-16/SM13-16

10	GB6187-M12-W	Self-locking Nut M12	écrou M12	2	ALL BIKES2012-2016(BUT50A)
11	YC88-04-02-BK	Right front fork protection BLACK L=600mm	Protection fourche droite NOIR L=600mm	1	F88s12-16/F88se1516
13	GB5787-M6×16-W	Plus screw M6X16	vis M6X16	2	ALL BIKES2012-2016
14	GB6177-M6-W	Hex. Flanged nut M6	écrou M6	2	ALL BIKES2013-15(BUT50A)/F88s16/F88se16/F12516/F125s16/F125se16/SM125s16
16	YC110-0419	shock bottom spacer φ12mm (same for top/bottom) LB	entretoise amortisseur bas φ 12 mm pour bras mono LB	4	F88s13-16/F88se1516/F12512-16/F125s12-16/F125se1516/SM125s12-16
18	PFMARZO-LB600	set of fork protection 600mm LB Black	jeu protection fourche 600mm LB Noir	1	F88s12-16/F88se1516
19	YC110-0403-02	oil steel line retainer on left front fork	passe durite sur protection fourche gauche	2	ALL BIKES2013-15(BUT50A)/F88s16/F88se16/F12516/F125s16/F125se16/SM125s16
	YC110-0421-01	oil steel line retainer on left front fork	passe durite sur protection fourche gauche	1	ALL BIKES2013-15(BUT50A)/F88s16/F88se16/F12516/F125s16/F125se16/SM125s16
24	YC110-0400-13	Pair of fork 600mm (not adjustable) 2015 GREY	Jeu de fourche 600mm 2015 GRIS	1	F88s1516/F88se1516

Front Brake Assy

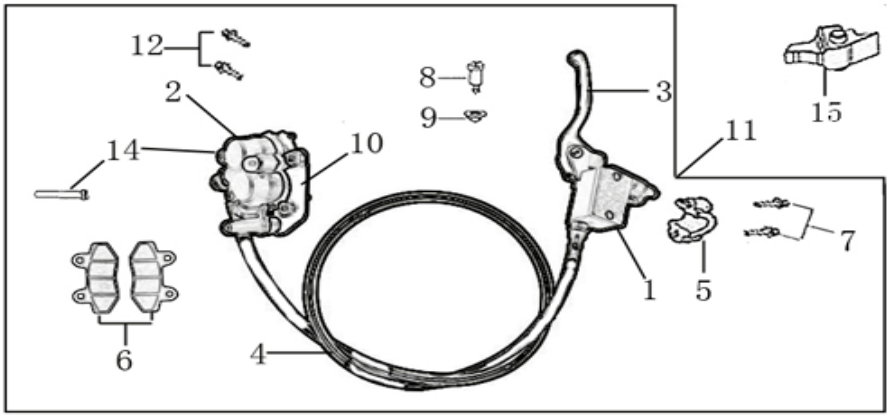

N	Ref.	Description	Français	Qty/ Bike	MODEL
1	YC110-0501-0102	Front Brake Reservoir for 2 pump	maitre cylindre frein avant pour étrier 2 pistons	1	ALL BIKES2012-15(BUT50A)/F88s16/F88se16/F12516/F125s16/F125se16/SM125s16
2	YC110-0501-0208	Front Brake Φ8 F88s 2016	Frein avant Φ8 F88s 2016	1	F88s16/F88se16
3	YC110-0501-014	Front brake lever 2014 With notch	LEVIER FREIN 2014	1	ALL BIKES2014-15(BUT50A)/ALL BIKES2016(BUT50A/SP2/SP3)
4	YC110-0501-0314	Front brake steel line L=980mm M10/Φ8 BLACK 2016	durite frein avant L=980mm M10/Φ8 NOIR 2016	1	F88s16/F88se16

5	YC110-0501-022	Brake perch bracket for double pump	demi cocotte frein avant pour frein double pistons	1	ALL BIKES2012-16(BUT50A)
7	GB5787-M6×22-G	Hex.bolt with flanged M6X22	vis M6X22	2	ALL BIKES2012-16(BUT50A)
8	HB06-M6×25-G	Hex.bolt with flanged M6X25	vis M6X25	1	ALL BIKES2012-16(BUT50A)
9	GB6177-M6-G	Self-locking nut M6	écrou M6	1	ALL BIKES2012-16(BUT50A)
11	YC110-0501-20	front brake assy 1 pump L=980mm Φ10/Φ8 2016	kit frein avant simple piston avec gaine plastic noire L=980mm Φ10/Φ8 2016	1	F88s16/F88se16
12	GB70-M6×30-W	Stud screw M6X30	vis M6X30	2	ALL BIKES2012-16（BUT50A）
15	YC110-0502-01	rubber for brake lever	caoutchouc levier frein avant	1	ALL BIKES2014-15(BUT50A）/ALL BIKES2016(BUT50A/SP2/SP3)

Front Wheel Assy

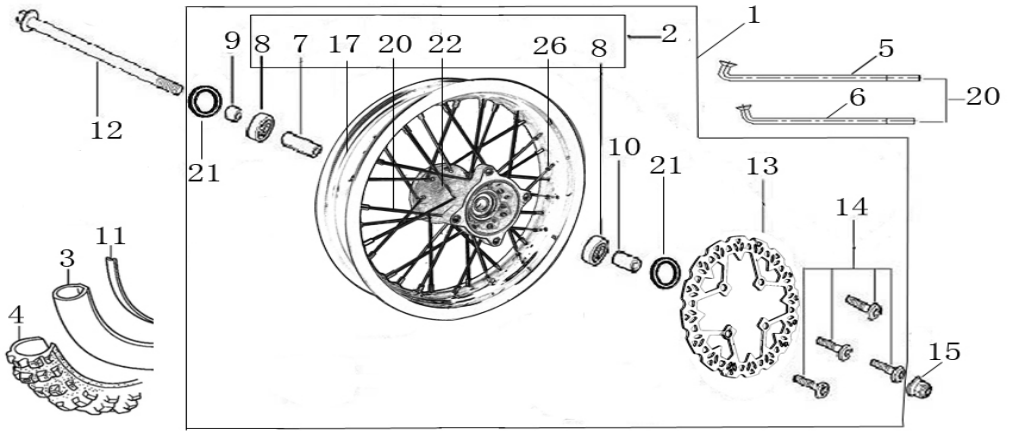

N	Ref.	Description	Français	Qty/ Bike	MODEL
1	YC110-0601-08	Complete STEEL Front wheel 1.4x10' with disk. Casting hub	roue avant complète ACIER 1.4x10' moyeux injecte avec disque	1	F88s16/F88se16
2	YC110-0602-01	Complete STEEL Front wheel 1.4x10' without disk. Casting hub	roue avant complète ACIER 1.4x10' moyeux injecte sans disque	1	F88s13-16/F88se1516
3	CHAMBRE10-2.5	Tube for front tire 2.50-10' GL	chambre air 2.50-10' GL	1	50A12-16/F88s13-16/F88se1516
	FB6170-M8-Cr	Tire valve nut M8	Ecrou M8 pour Chambre a air	1	ALL BIKES
4	250/10	Tire 2.50-10' GUANGLI	pneu 250-10' GUANGLI	1	50A12-16/F88s12-16/F88se16

7	YC110-0601-02	Front axle bushing Φ16×Φ22×44	entretoise central roue avant Φ16×Φ22×44	1	ALL BIKES2013-15(BUT50A)/ALL BIKES2016(BUT50A/SP2/SP3)
8	96140-6202-2Z	Ball bearing 6202-2Z Φ35×Φ15×11	roulement roue 6202-2Z Φ35×Φ15×11	2	ALL BIKES2012-2015（BUT50A）/ALL BIKES2016（BUT50A/SP2/SP3）
9	YC110-06-047	Front wheel spacer right φ15×Φ22×23mm with STEP 2015	entretoise roue avant droite φ15×Φ22×23mm	1	ALL BIKES2015(BUT50A)/ALL BIKES2016（BUT50A/SP2/SP3）
10	YC110-06-052	Front wheel spacer left φ15×Φ22×33mm	entretoise roue avant gauche φ15×Φ22×33mm	1	ALL BIKES2012-2015 (BUT50A)/ALL BIKES2016(BUT50A/SP2/SP3)
11	YC110-11-02	Tire lining for 10'	fond jante av 10'	1	50A12-16/F88s12-16/F88se1516
12	YC110-06-061	Front Axle 215 mm with Self-locking nut M14 for Marzocchi style fork	axe de roue avant L=215 mm marzochci avec ecrou M14	1	ALLBIKES2013-16(BUT50A/SM)
13	YC110-1115-01	Front disk φ200 mm 2016	disque frein avant φ200 mm 2016	1	F88s16/F88se16
14	GB70.2-M8×16	Screw for disk M8X16	vis disque frein M8X16	4	ALL BIKES2016 (BUT50A)
15	GB6187-M14-W	Self-locking nut M14	écrou roue avant M14	1	ALL BIKES2012-16(BUT50A)
17	YC50-0617-01	STEEL Rim for Front wheel 1.4×10'	cerceau roue av 1,4x10' ACIER	1	50A12-16/F88s12-16/F88se1516
20	JR10-10	set of front spoke 10' (98mm×24+104mm×8)	Jeu rayon avant 10' (98mm×24+104mm×8)	1	F88s12-16/F88se1516
21	YC110-0611	OIL SEAL φ22x35x5	joint spy roue φ22x35x5	2	ALL BIKES2013-16(BUT50A)
22	YC110-0622-02	Front hub casting with oil seal	moyeux avant injectée avec joint spy	1	ALL BIKES2012-15 (BUT50A/SPII/SPIII) /ALL BIKES 2016(BUT50A/SP)

Fuel Tank

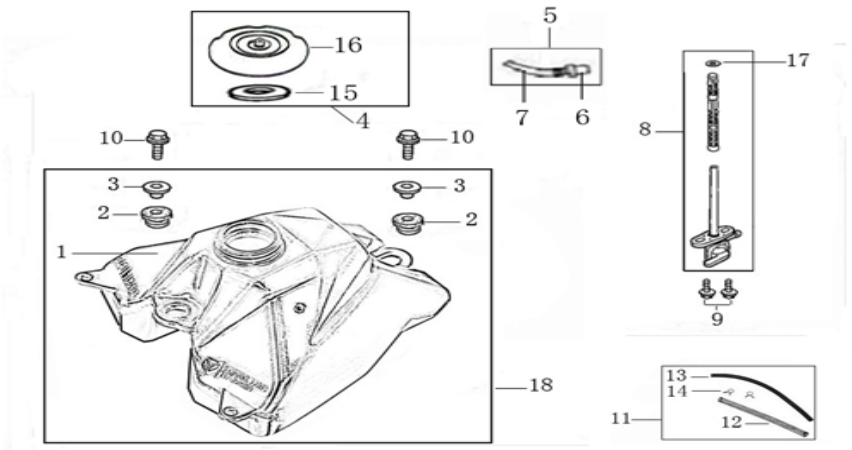

N	Ref.	Description	Français	Qty/ Bike	MODEL
1	YC110-0701-01	YCF Fuel tank with YC110-1910 1EA (suitable for pre 2013 bikes)	Reservoir YCF (Adaptable pour motos avant 2013)	1	ALL BIKES2013-16（BUT50A）
2	YC110-07-01	Cushion for fuel tank	caoutchouc pour reservoir	2	ALL BIKES2011-16
3	YC110-07-02	Washer for fuel tank Φ12×Φ30×11mm	entretoise pour reservoir Φ12×Φ30×11mm	2	ALL BIKES2011-16
4	YC110-0702-01	YCF Tank cap plastic 2013	Bouchon reservoir plastique YCF 2013	1	ALL BIKES2013-16
5	YC125-0704-BK	Fuel tank valve BLACK	Valve prise air NOIR	1	ALL BIKES
6	YC110-0704-BK	Cap of Fuel tank valve BLACK	Capuchon Valve prise air NOIR	1	ALL BIKES
7	YC110-0705-BK	Fuel tank valve Hose L=40mm BLACK	Durite caoutchouc Vale prise air L=40mm NOIRE	1	ALL BIKES
8	YC110-0703	Fuel cock assy.	robinet essence	1	ALL BIKES
9	GB5787-M6×16-W	Hex. Bolt with flanged M6X16	vis M6X16	2	ALL BIKES2012-2016
10	GB5787-M8×25-B	Hex. Bolt with flanged M8X25 BLACK	vis M8X25 NOIR	2	50A13-16/F88s13-16/F88se1516/F12513-16/F125s13-16/F125se1516/SM125s13-16
11	YC110-0706	fuel tank rubber line + spring Φ4.5×Φ8.5×210mm	durite reservoir avec ressort Φ4.5×Φ8.5×210mm	1	ALL BIKES
12	YC110-07061	fuel tank lspring L=180mm	ressort durite reservoir L=180mm	1	ALL BIKES
13	YC110-07062	fuel tank rubber line Φ4.5×Φ8.5×210	durite reservoir Φ4.5×Φ8.5×210	1	ALL BIKES
14	YC110-07063	Holding ring	collier FILTRE	2	ALL BIKES
15	YC110-0720-02	Rubber mat for tank cap plastic Φ14×Φ52×2mm Oil proof	Caoutchouc bouchon reservoir YCF Φ14×Φ52×2mm	1	ALL BIKES2013-16
17	YC110-0717	O-RING,Φ11×3mm For Fuel tank	Joint Thorique Φ11×3mm pour Reservoir	1	ALL BIKES2013-16（BUT50A）
18	YC110-0718	YCF Complete fuel tank suitable for pre 2013 bikes（with YC110-07-01 2EA+YC110-07-02 2EA+YC110-1910 1EA)	Reservoir complet YCF 2013 (Adaptable pour motos avant 2013)	1	ALL BIKES2013-16（BUT50A）
Air Filter					

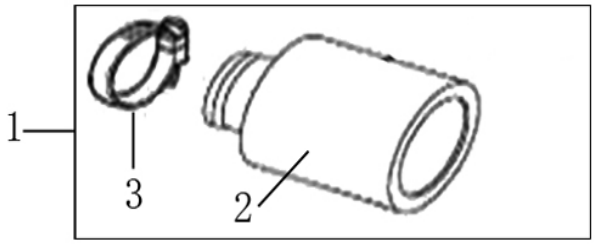

N	Ref.	Description	Français	Qty/ Bike	MODEL
1	YC110-0802-02-RD	Air filter assy 88cc Φ35mm （with YC110-0805 1EA）	filtre air 88cc Φ35mm Complet 2014	1	F88s14-16/F88se1516/P88s14 15
2	YC110-0801-02-RD	Air filter 88cc Φ35mm 2014	filtre seul 88cc Φ35mm 2014	1	F88s14-16/F88se1516/P88s14 15
3	YC110-0805	Holding ring φ27-φ51mm	collier Filtre φ27-φ51mm	1	ALL BIKES2012-2016（BUT50A）

Foot Peg assy

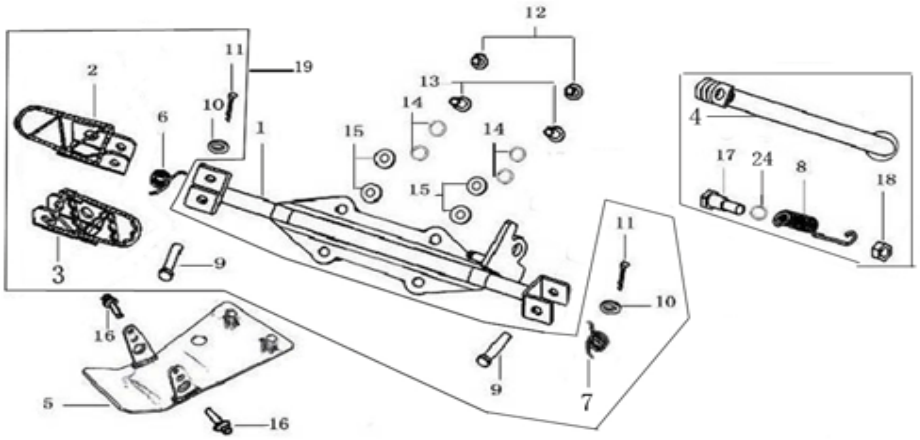

N	Ref.	Description	Français	Qty/ Bike	MODEL
1	YC88-0901-01	Foot pegs bar START F88s GREY	barre repose pied Grise START F88s GRISE 2013	1	F88s13-16/F88se1516
2	YC110-0902-01	Right foot peg Steel START / PILOT 2013 GREY	Repose pied Acier droit START / PILOT 2013 GRIS	1	F88s13-16/F88se1516/F12513-16/F125s13-16/F125se1516/P88s13-15/P12513-16/P15013-16/SM13-16
3	YC110-0903-01	Left foot peg Steel START / PILOT 2013 GREY	Repose pied Acier gauche START / PILOT 2013 GRIS	1	F88s13-16/F88se1516/F12513-16/F125s13-16/F125se1516/P88s13-15/P12513-116/P15013-16/SM13-16
4	YC110-198	Kick stand 225mm	bequille 225mm	1	F88s12-16/F88se1516
5	YC110-204-01	YCF Engine skid plate Steel START F88s / PILOT F88s MATTE BLACK	Sabot moteur Acier YCF START F88s / PILOT F88s NOIR MAT	1	F88s13-16/P88s13-14
6	YC110-09-01	Spring for right steel foot peg Φ1.5×Φ16.5×10mm	ressort repose pied droit acier Φ1.5×Φ16.5×10mm	1	ALL BIKES2013-2016(BUTSP1/SP2/SP3)

7	YC110-09-02	Spring for left steel foot peg Φ1.5×Φ16.5×10mm	ressort repose pied gauche acier Φ1.5×Φ16.5×10mm	1	ALL BIKES2013-2016(BUTSP1/SP2/SP3)
8	YC110-19-01	spring for kick stand Φ2.5×Φ15×105	ressort bequille Φ2.5×Φ15×105	1	ALL BIKES2014-16(BUTSP1/SP2/SP3)
9	119.1-085043	shaft pin for steel footpegs φ8×43	axe repose pied acier φ8×43	2	ALL BIKES2014-16(BUTSP1/SP2/SP3)
10	GB97-Φ8-W	flat washer φ8×16×1	rondelle φ8×16×1	2	ALL BIKES2011-16
11	GB91-Φ2×25-W	Cotter pin 2.0×25	goupille 2.0×25	2	ALL BIKES2013-16
12	GB5787-M8×25-W	screw M8X25	vis M8x25	2	F88s13-16/F88se1516
12	GB5787-M8×50-W	screw M8X50	vis M8x50	2	F88s13-16/F88se1516
14	GB93-Φ8-W	Foot pegs bar washer φ8	rondelle φ8	4	ALL BIKES2012-2016
15	GB97-Φ8-W	flat washer φ8×16×1	rondelle φ8×16×1	4	ALL BIKES2011-16
16	GB5787-M6×16-W	screw M6X16 for skid plate	vis sabot M6X16	2	ALL BIKES2012-2016
17	FB2-M10×35×1.5-G	Stepped screw M10X35 for kick stand	vis bequille M10X35	1	ALL BIKES2014-16(BUTSP1/SP2/SP3)
18	GB6170-M10-G	Hex. Nut M10	ecrou bequille M10	1	ALL BIKES2014-16(BUTSP1/SP2/SP3)
19	YC110-0902/10	Steel foot pegs set START / PILOT 2013 GREY	Jeu repose pied Acier START / PILOT 2013 GRIS	1	F88s13-16/F88se1516/F12513-16/F125s13-16/F125se1516/P88s13-15/P12513-16/P15013-16/SM13-16
24	GB93-Φ10-W	Standard spring washer φ10	rondelle φ10	1	ALL BIKES2014-16(BUTSP1/SP2/SP3)
Swing Arm assy					

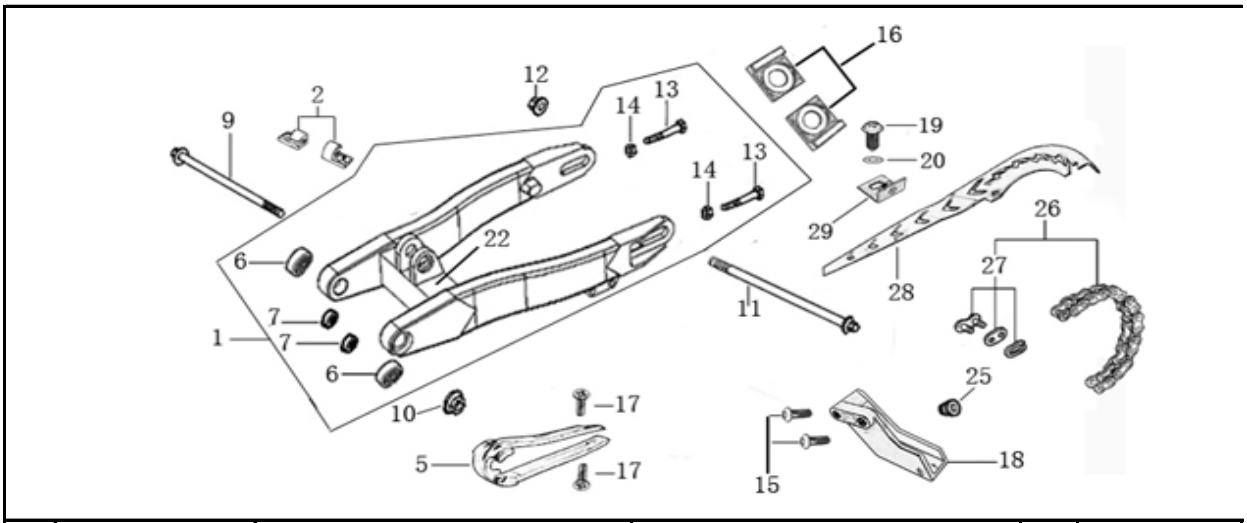

N	Ref.	Description	Français	Qty/ Bike	MODEL
1	YC110-1001-07	swing arm mono Steel 350mm 2016	bras oscillant acier mono Acier 350mm 20016	1	F88s16/F88se16
2	YC110-10-014-BK	Rear brake clip for BLACK	attache durite frein arriere NOIR	1	ALL BIKES2012-15(BUTSP1/SP2/SP3)/ ALL BIKES2016 (BUTSP2/SP3)
5	YC110-10-023	YCF Chain slider for Steel swing arm 390mm	patin chaine court YCF pour bras Acier 390mm	1	F88s12-16/F88se1516/F12512-16/F125s12-16/F125se1516/P88s12-15/P1251314/P1501314/SM125s13-16/SM1501314
6	6200/28-12	Swing arm bearing φ28xφ12x8mm	roulement bras oscillant φ28xφ12x8mm	2	ALL BIKES2009-16
7	YC110-1001-013	Spacer for swing arm Φ12×Φ20×11.5	entretoise Φ12×Φ20×11.5	2	F88s12-16/F88se1516/F12512-16/F125s12-16/F125se1516/P88s12-15/P12513-16/P15013-16/SM12-16/SP116
9	YC110-10-034	Swing arm shaft with self lock nut M12 L=192mm	axe bras oscillant φ10 avec ecrou M12 L=192mm	1	F88s13-16/F88se1516/F12513-16/F125s13-16/F125se1516/SM125s13-16
10	GB6187-M12-W	Self locking nut M12	ecrou bras oscillant M12	1	ALL BIKES2012-2016(BUT50A)
11	YC110-11-074	Rear wheel axle L=215mm with Self locking nut M14	axe roue arriere avec ecrou L=215mm avec ecrou M14	1	F88s13-16/F88se1516/F12513-16/F125s13-16/F125se1516/P88s13-15/P12513-16/P15013-16/SP116
12	GB6187-M14-W	Self locking nut M14	ecrou axe roue arrière M14	1	ALL BIKES2012-16(BUT50A)
13	GB5783-M8×40-W	Exterior hex. Bolt M8X40	vis tendeur chaine M8x40	2	ALL BIKES2012-16（BUT50A）
14	FB6170-M8-W	Hex. Nut M8	ecrou tendeur chaine M8	2	ALL BIKES2012-16(BUT50A)
15	GB70.2-M8×25-Cr	Stud screw M8X25	vis M8x25	2	5011/F88s12-16/F88se1516

15	GB6177-M8-W	Hex. Nut M8	ecrou tendeur chaine M8	2	5011/F88s12-16/F88se1516
16	YC110-11-08	Block axle SILVER	Tendeur chaine SILVER	2	F88s12-16/F88se1516/F12512-16/F125s12-16/F125se1516/P88s13-15/P12513-16/P15013-16/SM12-16/SP116
17	GB819-M6×16-W	Plus screw M6X16	vis m6x16	4	ALL BIKES2015-16(BUTSP2/SP3)
	GB6100-M6-CW	nut M6×25mm	Vis M6×25mm	4	ALL BIKES2015-16(BUTSP2/SP3)
18	YC88-1004	chain guide assy WHITE	guide chaine BLANC	1	5011/F88s12-1516/F88se1516
19	GB818-M6×12-W	Plus screw M6x12	vis M6x12	3	ALL BIKES2012-16(BUT50A)
20	GB97-Φ6	Flat washer φ6	rondelle φ6	3	ALL BIKES2012-16
26	420H-96T	Chain 420H-96T,normal	Chaine 420 96 maillons standart	1	F88s16/F88se16
27	AR-420	Chain link	Attache rapide chaine	1	All BIKES
28	YC110-0600-03	Chain box protection F88s 2016	Protection chaine plastique F88s 2016	1	F88s16/F88se16
29	YC110-0600-02	Chain box protection support	Support Protection chaine plastique	1	ALL BIKES2012-2016(BUT50A)
29	YC110-0600-021	Chain box protection support	Support Protection chaine plastique	1	ALL BIKES2012-2016(BUT50A)

Rear Wheel Assy

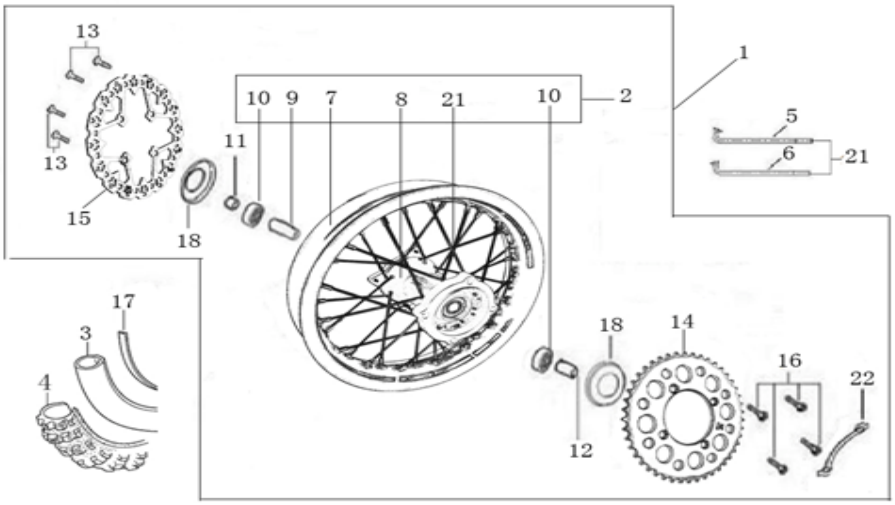

N	Ref.	Description	Français	Qty/Bike	MODEL
1	YC110-1101-0A	Complete STEEL Rear wheel 1.40x10' with YCF disk. Casting hub	roue arriere complète ACIER 1.40x10' avec disque YCF moyeux injecte	1	F88s16/F88se16

2	YC110-1102-01	Complete STEEL Rear wheel 1.40x10' without disk. Casting hub	roue arriere complète ACIER 1.40x10' moyeux injecte sans disque	1	F88s12-16/F88se1516/P88s12-15
3	CHAMBRE10	Tube for Rear tire 3.00-10' GL	chambre air 10' standard GL	1	F88s14-16/F88se1516/P88s14 15
	FB6170-M8-Cr	Tire valve nut M8	Ecrou M8 pour Chambre a air	1	ALL BIKES
4	300/10	YCF tyre 3.00/10'	pneu 3.00/10' YCF	1	F88s12-16/F88se1516/P88s12-15
7	YC50-1117-01	STEEL Rim 1.40×10'	cerceau roue 1,40x10 ACIER	1	50A12-16/F88s12-16/F88se1516/P88s12-15
8	YC110-1122-02	Rear wheel hub Casting with oil seal	moyeux arrière injectée avec joint spy	1	ALL BIKES2012-16 (BUT50A/SP)
10	96140-6202-2Z	Ball bearing 6202-2Z Φ35×Φ15×11	roulement roue 6202-2Z Φ35×Φ15×11	2	ALL BIKES2012-2015（BUT50A）/ALL BIKES2016（BUT50A/SP2/SP3）
11	YC110-11-041	Rear wheel spacer right Φ15×Φ22×29mm	entretoise roue arriere droite Φ15×Φ22×29mm	1	F88s12-16/F88se1516/F12512-16/F125s12-16/F125se1516/P88s12-15/P12513-16/P15013-16/SM12-16/SP116
12	YC110-11-052	Rear wheel spacer left Φ15×Φ22×38mm	entretoise roue arriere gauche Φ15×Φ22×38mm	1	F88s12-16/F88se1516/F12512-16/F125s12-16/F125se1516/P88s12-15/P12513-16/P15013-16/SM12-16/SP116
13	GB70.2-M8×16	Screw for disk M8X16	vis disque frein M8X16	4	ALL BIKES2016 (BUT50A)
14	YC110-11-06/41	YCF Driven sprocket 420-41T	couronne acier 41T YCF	1	50A12-15/F88s12-16/F88se16/P88s12-15
15	YC110-1115-01	Rear Brake disc φ200mm 2016	Disque frein arrière φ200 mm 2016	1	F88s16/F88se16
16	GB5783-M8×25-W	Exterior Hex.Bolt M8X25	vis M8x25	4	F88s13-16/F88se1516/F12513-16/F125s13-16/F125se1516/P88s13-15/P12513-16/P15013-16/SM13-16
17	YC110-11-02	Tire lining for 10'	fond jante 10'	1	50A12-16/F88s12-16/F88se1516
18	YC110-0611	oil seal Φ22×Φ35×5	joint spy roue Φ22×Φ35×5	2	ALL BIKES2013-16(BUT50A)
21	JR10-10.5	set of spoke 10' (106mm×16+111mm×16)	jeu rayon arrière 10' (106mm×16+111mm×16)	1	50A12-16/F88s12-16/F88se1516/P88s13-15

22	YC110-11-03	Sprocket Locking piece	block couronne	2	ALL BIKES2013-16（BUTSP1/SP2/SP3）

REAR BRAKE

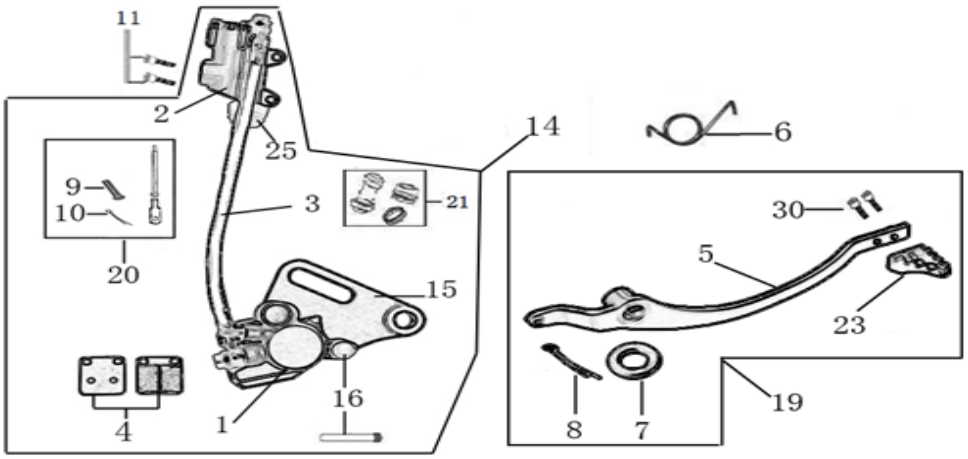

N	Ref.	Description	Français	Qty/ Bike	MODEL
1	YC110-1201-04	Rear Caliper 1 pistons w/t abestos	étrier frein arrière 1 piston sans amiante	1	ALL BIKES2012-2015(BUT50A）/ALL BIKES2016(BUT50A/SP2/SP3)
2	YC110-1201021	Rear reservoir φ 8mm（with stick L=115mm）	maitre cylindre frein arrière avec embout durite φ 8mm	1	ALL BIKES2012-14(BUT50A)/F88s1516/F88se1516/F1251516/F125se1516/F125s1516/SM125s1516
3	YC110-1201046	Oil steel tube L=360mm Φ8/Φ10 BLACK	durite frein arrière L=360mm Φ8/Φ10 NOIR	1	F88s16/F88se16
4	YC110-120104	Friction pad for 1 piston brake	plaquette frein arrière 1 piston	2	F88s12-16/F88se1516
5	YC110-1205-03	Steel brake pedal START F88s	pédale de frein START F88s	1	F88s12-16/F88se1516
6	YC110-21-01	Spring for Steel brake pedal' Φ3×Φ32×7mm	ressort pour pédale de frein Acier Φ3×Φ32×7mm	1	ALL BIKES2013-14(BUT50A)/ALL BIKES2015-2016(BUT50A/SP1/SP2/SP3)
7	FB20-15×25×2-W	Flat washer Φ14.5×Φ25×2	rondelle Φ14.5×Φ25×2	1	F88s13-16/F88se1516/F12513-16/F125s13-16/F125se1516/SM125s13-16
8	GB91-Φ2.5×30-W	Slipt Pin Φ2.5×30mm	goupille Φ2.5×30mm	1	F88s13-16/F88se1516/F12513-16/F125s13-16/F125se1516/SM125s13-16
9	119.1-07016	Pin shaft 7x16mm	axe 7x16mm	1	ALL BIKES2012-16 (BUT50A)
10	GB91-Φ1.6×16-W	Split pin 1.6x16mm	goupille 1.6x16mm	1	ALL BIKES2012-16 (BUT50A)
11	GB70-M6×20	Hex. Bolt M6x20	vis M6x20	2	ALL BIKES2013-16(BUT50A)
14	YC110-12013-03	Rear brake aasy 1 piston L=360mm 2016	Kit frein arriere 1 piston avec gaine plastic L=360mm 2016	1	F88s16/F88se16

15	YC110-1201-01	Rear brake bracket T=5MM	patte fixation étrier frein arriere T=5MM	1	ALL BIKES2012-15(BUT50A)/ALL BIKES2016(BUT50A/SP2/SP3)
16	YC110-1255	Rear Brake pads Screw L=38mm	Vis plaquette AR L=38mm	2	ALL BIKES2012-15(BUT50A)/ALL BIKES2016(BUT50A/SP2/SP3)
19	YC110-213	Steel Brake pedal	pédale de frein Acier	1	5011/F88s12-16/F88se1516
20	YC110-12021	Rear reservoir puch stick L=115mm	Tige poussoir maitre cylindre L=115mm	1	F88s13-16/F88se1516/F12513-16/F125s13-16/F125se1516/SM125s13-16
21	YC110-120110	rubber for rear caliper	jeu de caoutcgouc d'etrier frein arriere	1	ALL BIKES2012-2015（BUT50A）/F88s16/F88se16/F12516/F125s16/F125se16/SM125s16
23	YC110-21-10	Steel brake pedal end cap	embout pédale de frein Acier	1	F88s12-16/F88se1516/F12512-16/F125s12-16/F125se1516/P88s12-15/P12513-16/P15013-16/SM12-16
25	YC110-12025	Rubber for REAR RESERVOIR PUSH STICK	Caoutchouc tige maitre cylindre frein arrier	1	ALL BIKES2012-2015（BUT50A）/F88s16/F88se16/F12516/F125s16/F125se16/SM125s16
30	GB70-M6×16-Cr	Hex. Bolt M6x16	vis M6x16	2	F88s13-16/F88se1516/F12513-16/F125s13-16/F125se1516/P88s13-15/P12513-16/P15013-16/SM13-16

Exhaust system

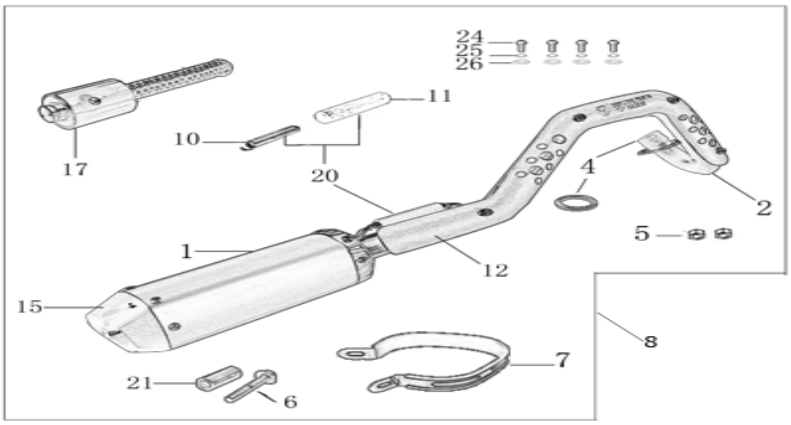

N	Ref.	Description	Français	Qty/Bike	MODEL
1	YC110-13016-GY	YCF Muffler 94db START L=295mm (1 springs) 2015 GREY	silencieux YCF 94db 2015 GRISE	1	F88s1516/F88se1516/F1251516/F125s1516/F125se1516/P88s15/P1251516/P1501516/SM1516
2	YC110-13022-02	Exhaust pipe with protection plate Φ28 mm START 2013	collecteur avec plaque Φ28 mm START 2013	1	F88s13-16/F88se1516/F12513-16/F125s13-16/F125se1516/SM125s13-16
4	18291/152FMH	Exhaust pipe washer φ32×φ25.5×4	joint pot φ32×φ25.5×4	1	ALL BIKES2012-2016（BUT50A）
5	GB6170-M6-W	Hex flanged self locking nut M6	écrou M6	2	ALL BIKES

6	GB5787-M8×40-W	Hex. Bolt with flanged M8x40	vis M8x40	1	F88s13-16/F88se1516/F12513-16/F125s13-16/F125se1516/SM125s13-16/SP113-16/SP213-16/SP313-16
7	YC110-13-04	Hoop for muffler YCF START 2011(with FB13-Φ10×Φ14×23-W 1EA+GB5787-M8×40-W 1EA)	Attache silencieux YCF START 2011	1	5011/F88s12-16/F88se1516/F12512-16/F125s12-16/F125se1516/P88s12-15/P12513-16/P15012-16/SP112-16/SM12-16
8	YC110-136-GY	START Muffler& Exhaust pipe assy YCF 94db (1 spring)	Echapement complet YCF 94db START (1 ressort)	1	F88s1516/F88se1516/F1251516/F125s1516/F125se1516/SM125s1516
10	YC110-13-201	muffler spring Φ6.5×Φ9×50mm	ressort pot Φ6.5×Φ9×50mm	1	ALL BIKES2012-14(BUT50A)/ALL BIKES2015-16（BUT50A/SP)
11	YC110-138	rubber for muffler spring	caoutchouc ressort pot	1	ALL BIKES2012-16(BUT50A)
12	YC110-1312	Protection for exaust pipe START SM125s	Grille pot START SM125s	1	F88s13-16/F88se1516/F12513-16/F125s13-16/F125se1516/SM125s13-16
15	YC110-13-32	Muffler end cap YCF	Emout silencieux YCF	1	5011/F88s12-16/F88se1516/F12512-16/F125s12-16/F125se1516/P88s12-15/P12513-16/P15013-16/SM12-16/SP113-16
17	YC110-13-301	Noise reducer (spark arrestor) YCF START	Bride de pot YCF START	1	F88s12-16/F88se1516/F12512-16/F125s12-16/F125se1516/P88s12-15/P12513-16/P15013-16/SM12-16/SP112-16
20	YC110-13-21	muffler spring with rubber	ressort pot avec le caoutchouc	1	ALL BIKES2012-14(BUT50A)/ALL BIKES2015-16（BUT50A/SP)
21	FB13-10×14×23-W	Muffler Hoop spacer φ10×φ14×23mm	Entretoise attache silencieux φ10×φ14×23mm	1	F88s13-16/F88se16/F12513-16/F125s13-16/F125se1516/SM125s13-16
24	GB70.2-M6×10-Cr	Plus screw M6×10	vis M6×10	4	ALL BIKES2013-16
25	GB93-Φ6-W	Standard spring washer φ6	rondelle φ6	4	ALL BIKES2013-16
26	GB97-Φ6-W	flat washer φ6	rondelle φ6	4	ALL BIKES2012-16
Seat & Plastic kit					

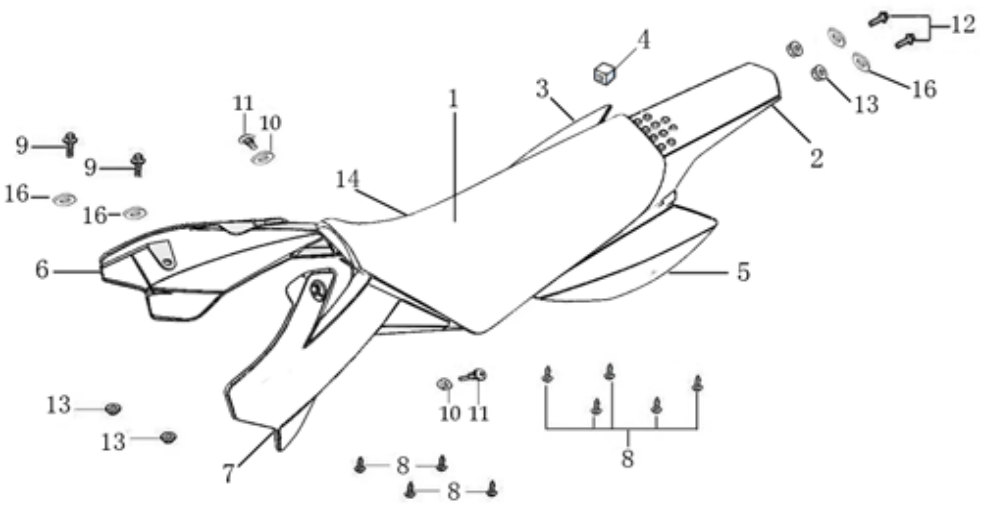

N	Ref.	Description	Français	Qty/ Bike	MODEL
1	YC110-1401-10	YCF Seat assy L=480mm 2016	selle CRF 50	1	F88s16/F88se16/F12516/ F125s16/F125se16/SM125 s16
2	YC110-14-012WH	YCF Rear fender 2013 WHITE	Garde boue arrière YCF 2013 avec Picots BLANC	1	ALL BIKES2015(BUT50A)/F88 s16/F88se16/F12516/F125 s16/F125se16/SM125s16
3	YC110-14-022WH	YCF right side plastic WHITE	Plaque latérale droite YCF BLANC	1	F88s12-16/F88se1516/F12512-16/F125s12-16/F125se1516/P88s15/P1251516/P1501516/SP112-16/SP212-16/SP312-16/SM125s1516
4	YC110-14-03	Cushion for right side plastic	caoutchouc plaque laterale droite	1	ALL BIKES
5	YC110-14-042WH	YCF left side plastic WHITE	Plaque laterale gauche YCF BLANC	1	F88s12-16/F88se1516/F12512-16/F125s12-16/F125se1516/P88s15/P1251516/P1501516/SP112-16/SP212-16/SP312-16/SM125s1516
6	YC110-14-052BK	YCF Right shroud BLACK	Ouie radiateur droite YCF NOIRE	1	ALL BIKES2015-16(BUT50A/50E)
7	YC110-14-062BK	YCF Left side shroud BLACK	Ouie radiateur gauche YCF NOIRE	1	ALL BIKES2015-16(BUT50A/50E)
8	GB845-ST4.8×16-G	Screw for plastic kit ST4.8x16	vis plastique ST4.8x16	9	ALL BIKES2012-16
9	GB5787-M6×20-W	hex. Bolt with flanged M6x20	vis M6x20	2	ALL BIKES
10	YC110-02-13	Rubber washer Φ6×Φ14×3mm	joint caoutchouc Φ6×Φ14×3mm	2	ALL BIKES2012-16
11	FB5787-M5×12-W	hex. Bolt with flanged M5×12	vis M5x12	2	ALL BIKES2012-16
11	GB96-Φ5-W	flat washer Φ5×Φ12	rondelle Φ5×Φ12	2	ALL BIKES2015-16

12	GB5787-M6×20-B	hex. Bolt with flanged M6x20 BLACK	vis M6x20 NOIR	2	ALL BIKES2012-16
13	GB6177-M6-W	Hex. Flanged nut M6	écrou M6	2	ALL BIKES2013-15(BUT50A)/ALL BIKES2016(BUT50A/SP)
14	YC110-14024	START seat cover 2016	Housse selle START 2016	1	F88s16/F88se16/F12516/F125s16/F125se16/SM125s16
16	YC110-03-01	Rubber washer Φ6×Φ18×4mm	joint caoutchouc Φ6×Φ18×4mm	4	ALL BIKES
16	GB96-Φ6	flat washer φ6	rondelle φ6	4	ALL BIKES2012-16

ELECTRIC

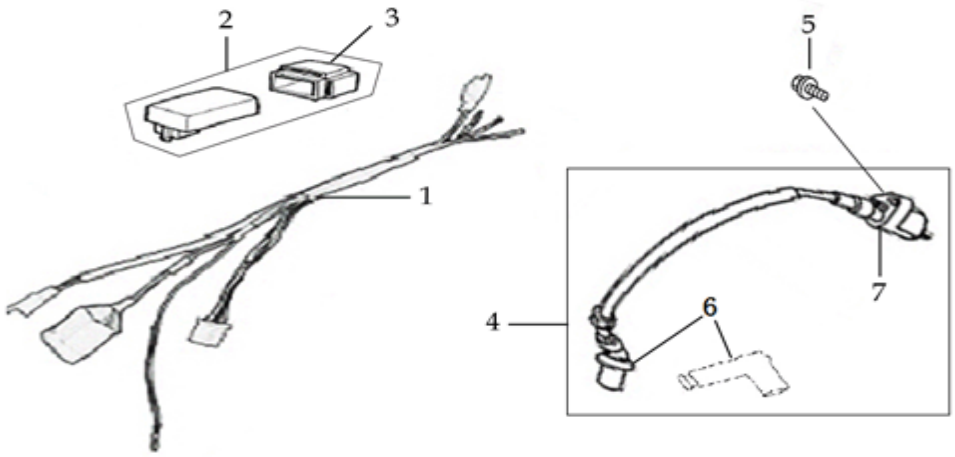

N	Ref.	Description	Français	Qty/Bike	MODEL
1	YC88-1501	Wire harness 88CC	Faisceaux éléctrique 88CC	1	F88s12-16/P88s13-15
2	YC88-1503	CDI Ignitor assy.88cc	CDI 88cc	1	5011/F88s12-16/F88se1516/P88s12-15
3	YC110-1501-03	Ignitor rubber	caoutchouc cdi	1	ALL BIKES2012-16（BUT50A/SP3）
4	YC110-1504-05	Ignitor coil L=160mm	bobine haute tension L=160mm	1	F88s13-16/F88se1516
5	GB5787-M6×20	Hex. Bolt with flanged M6x20	vis M6x20	1	ALL BIKES2013-16(BUT50A/SP3)
6	YC110-1505	anti interference red	anti parasite rouge	1	ALL BIKES2012-2016（BUT50A/SP3)
7	YC110-1504	Ignitor coil	bobine haute tension	1	ALL BIKES2012-2016（BUT50A/SP3)

Frame

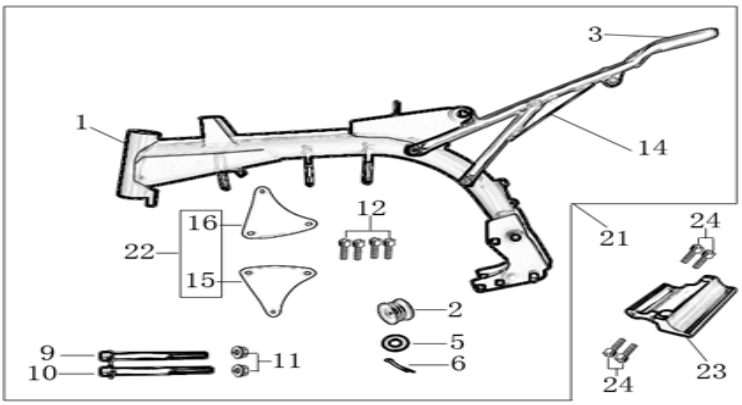

N	Ref.	Description	Français	Qty/ Bike	MODEL
1	YC88-172-03-WH	START F88s -30mm 2016 SHORTER Frame mono swing arm WHITE	Cadre chromolly COURT START F88s 2016 bras mono BLANC	1	F88s16
2	YC110-2201	YCF Chain tensioner component	roulette chaine YCF	1	ALL BIKES2011-2016（BUT50A）
3	YC110-0700-11	Tail cover sponge	Mousse Boucle arriere	1	ALL BIKES2014-16(BUT50A/SP3)
5	GB97-Φ10-W	Flat washer φ10x17x2	rondelle φ10x17x2	1	ALL BIKES2014-16（BUT50A）
6	GB91-Φ2×25-W	cotter pin φ2.0×25	goupille φ2.0×25	1	ALL BIKES2013-16
9	GB5787-M8×110-W	Hex. Bolt with flanger face M8X110	vis m8x110	1	F88s13-16/F88se1516/F12513-16/F125s13-16/F125se1516/P88s13-15/P12513-16/P1513-16/P15013-16/SM13-16
9	GB5787-M8×100-W	Hex. Bolt with flanger M8x100	vis M8x100	1	F88s13-16/F88se1516/P88s13-15/P12513-16/P15013-16/SM15013-16
10	GB6187-M8-W	Self locking nut M8	ecrou M8	2	ALL BIKES
12	GB70-M8×20	Hex. Bolt M8X20	vis M8x20	4	F88s13-16/F88se1516/F12513-16/F125s13-16/F125se1516/SP113-16/SP213-16/SP313-16/SM125s13-16
14	YC88-16-020	START F88s rear frame part BLACK	Boucle arrière START F88s NOIRE	1	F88s12-16
15	YC88-16-030-BK	frame engine pads left START F88s BLACK	patte de cadre gauche START F88s NOIRE	1	F88s12-16
16	YC88-16-040-BK	frame engine pads right START F88s BLACK	patte de cadre droite START F88s NOIRE	1	F88s13-16/F88se1516
21	YC88-161-02-WH	complète SHORTER frame mono swing arm START F88s WHITE 2016	cadre complet bras mono COURT START F88s BLANC 2016	1	F88s16

22	YC110-16-063-BK	set of engine pads START F88s BLACK	jeu de patte de cadre START F88s NOIRE	1	8811/F88s13-16
23	YC88-172-01	Cradle Aluminum alloy	plaque renfort aluminium 88	1	F88s12-16/F88se1516
	GB70.2-M8×25	screw M8x25	vis M8x25	4	F88s1516/F88se1516

FRONT SPROCKET PROTECTION

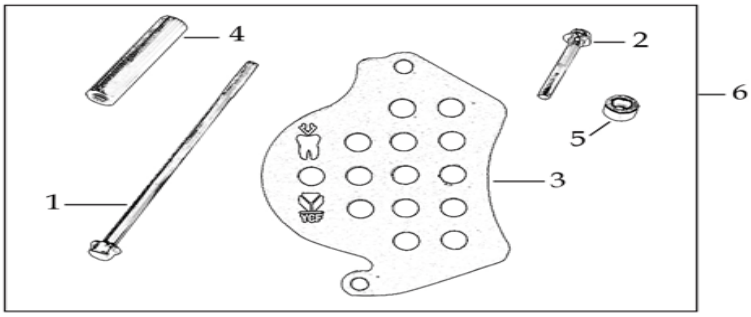

N	Ref.	Description	Français	Qty/ Bike	MODEL
1	GB5787-M6×120-Cr	Hex. Bolt with flanger M6×120 Chrome	vis M6×120	1	ALL BIKES2012-16（BUT50A/F88se/F125se/SP3）
2	GB5787-M6×40-Cr	Hex. Bolt with flanger M6×40 Chrome	vis M6×40	1	ALL BIKES2012-16（BUT50A/F88se/F125se/SP3）
3	YC110-24-071-BK	Aluminium chain protection 2013 START BLACK	Protection PSB Aluminium 2013 START NOIR	1	F88s13-16/F12513-16/F125s13-16/SM125s13-16
4	FB13-7×12×55-W	bushing Φ7xΦ12x55	entretoise Φ7xΦ12x55	1	ALL BIKES2012-16（BUT50A/F88se/F125se/SP3）
5	FB13-7×12×7-W	bushing Φ7xΦ12x7	entretoise Φ7xΦ12x7	1	ALL BIKES2012-16（BUT50A/F88se/F125se/SP3）
6	YC110-251BK	Complete Aluminium chain protection 2013 START BLACK	Protection complète PSB Aluminium 2013 START NOIR	1	F88s13-16/F12513-16/F125s13-16/SM125s13-16

GRAPHICS

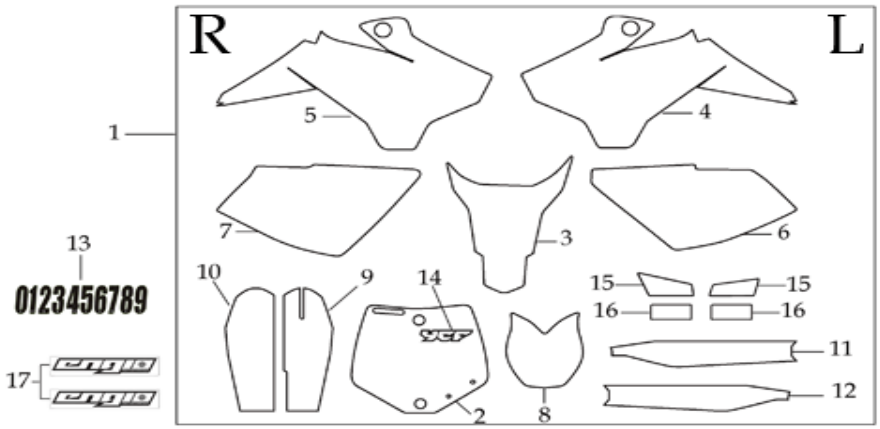

N	Ref.	Description	Français	Qty/ Bike	MODEL
1	KD88S2016	START F88s complete graphic kit 2016	Kit deco complet START F88s 2016	1	F88s16
2	YC110-33-010	START F88s/F88se Front plate graphic 2016	Sticker Plaque avant START F88s/F88se 2016	1	F88s16/F88se16
3	YC110-33-020	START Rear mudguard graphic 2016	Sticker GB Arriere START 2016	1	F88s16/F88se16/F12516/F125s16/F125se16
4	YC110-33-030	START F88s Left shrouder graphic 2016	Sticker Ouie gauche radiateur START F88s 2016	1	F88s16
5	YC110-33-040	START F88s Right shrouder graphic 2016	Sticker Ouie droite radiateur START F88s 2016	1	F88s16
6	YC110-33-050	START F88s Left side plate graphic 2016	Sticker Plaque laterales gauche START F88s 2016	1	F88s16
7	YC110-33-060	START F88s Right side plate graphic 2016	Sticker Plaque laterales droite START F88s 2016	1	F88s16
8	YC110-33-070	START F88s front fender Front fender graphic 2016	Sticker GB Avant START F88s 2016	1	F88s16
9	YC110-33-080	START F88s Front left shock protection graphic 2016	Sticker Protection gauche fourche START F88s 2016	1	F88s16
10	YC110-33-090	START F88s Front right shock protection graphic 2016	Sticker Protection droit fourche START F88s 2016	1	F88s16
	YC110-1909	Sticker FACTORY Shock Absorber	Autocollant FACTORY Amortisseur	1	ALL BIKES2013-16（BUT50A/SP3）
	YC110-1910	GAS TANK STICKER	STICKER RESERVOIR	1	ALL BIKES2013-16(BUT50A）
	YC110-1901	Sticker Chain	Autocollant Chaine	1	ALL BIKES2013-16

	YC110-1902	Sticker Tire	Autocollant Pression Pneu	1	ALL BIKES2013-16
	YC110-1903	Sticker Warning OIL Level	Autocollant Attention Niveau Huile	1	ALL BIKES2013-16
	YC110-1904	Sticker Rear Mudguard 70×57mm	Autocollant garde boue arriere 70×57mm	1	ALL BIKES2013-16
	YC110-1905	Sticker CE	Autocollant CE	1	ALL BIKES2013-16
	YC110-1906	Warning sticker	Sticker Attention	1	ALL BIKES2013-16
	YC110-1907	Warning Sticker Transport	Sticker Caisse Avertissement Transport	1	ALL BIKES2013-16
	YC110-1908	Warning Sticker Shosk Absorber	Sticker Avertissement Amortisseur	1	ALL BIKES2013-16
			ENGINES		
	MOTEUR88	ENGINE 88 （with RCSC-BK 1EA）	MOTEUR YX 88	1	F88s13-16/P88s13-15
	17311/152FMIZL-57	Inlet Pipe,Pro 88PILOT 2012	PIPE ADMISSION 88PILOT 2012	1	F88s13-16/F88se1516/P88s13-15
	17322/152FMH	carburettor paper gasket Φ28	joint papier carburateur Φ28	1	ALL BIKES2015-16 (BUT50A/SP3190)
	17332/152FMH01	Intake Gasket	JT PAPIER PIPE ADMISSION	1	ALL BIKES2015-16 (BUT50A/SP3190)
	F00C039	carburettor isolating gasket Φ27.5	joint plastique carburateur Φ27.5	1	ALL BIKES2015-16 (BUT50A/SP3190)
	11411/152FMH	Crankcase Cover, LH	CARTER ALLUMAGE	1	ALL BIKES2015-16 (BUT50A/SP3190)
	RCSC-BK	Right crankcase small Cover 88/125 BLACK	DEMI CARTER EMBRAYAGE NOIR 88/125	1	F88s14-16/F88se1516/F12514-16/F125s14-16/F125se1516/P88s1415/P12514-16/SM125s14-16
	43451/152FMH	STARTER KICK SMALL HOLE	KICK PETIT DIAMETRE	1	F88s13-16/F88se1516/F12513-16/F125s13-16/F125se1516/SM125s13-16
	24700/152FMI/3V	Gearshift Pedal	SELECTEUR DEPORTEE	1	F88s13-16/F125s13-16/P88s13-15/SM125s13-16

CARBU					
	YC110-486B	Carburetor 88/88P 2012 with main jet 85 and slow jet 15	Carburateur 88/88P 2012 GICLEUR 85 GICLEUR 15	1	F88s13-16/F88se1516/P88s13-15
	GICLEUR20	slow jet 20	GICLEUR 20	1	F88s13-16/F88se1516/P88s13-15
CARTONS - CAISSES MOTOS					
	YC110-CARTON-RS	BIKE BOX R START 1470×380×820mm	CARTON EMBALLAGE MOTO R START	1	F88s13-16/F12512-16/F125s12-16/P88s13-15/P12513-14/SM125s13-15
	YC110-FOAMBOX	Foam box 420×340×160mm	Cale PS	1	ALL BKIES2014-16
	YC110-FILM	Protective film for seat 600×600×0.02mm	Protection plastique pour Selle	1	ALL BKIES2014-16
CATALOGUES - FICHES MOTOS - FICHES STICKER					
	YC110-0700-01	Accessory tools	Trousse a outils	1	ALL BIKES
	YC110-0700-0201	Owner manual 2015	Manuel Utilisation 2015	1	ALL BIKES2013-16
	YC110-0700-0401	Vin Plate 2015	Plaque Vin 2015	1	ALL BIKES2013-16
	YC110-0700-03	A4 sheet assy	Fiche A4	1	ALL BIKES

2016

125mm
L=710mm

						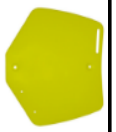						

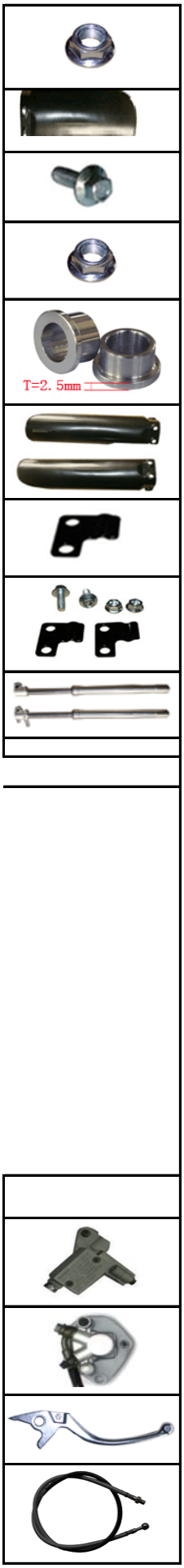
T=2. 5mm

215mm

192mm
215mm

17mm

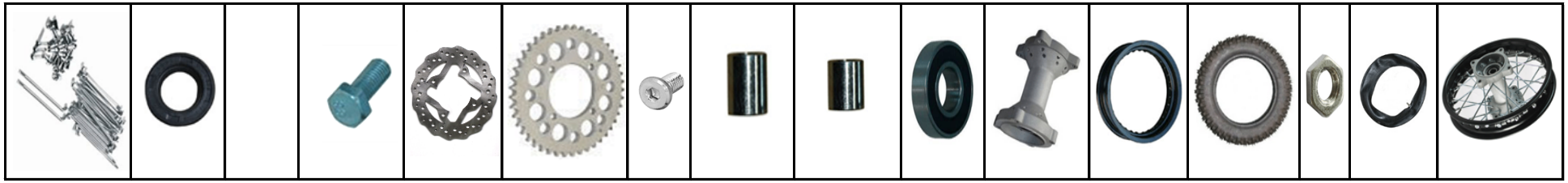

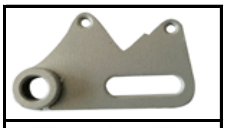

38mm

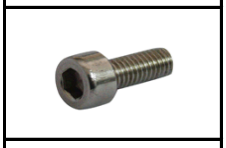

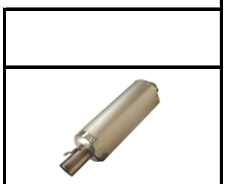

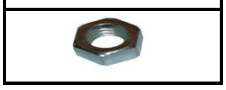

L=50mm
L=50mm

FACTORY
RACING PARTS
YCF-FRANCE
DRIVE CHAIN - CHAINE

TIRE INFORMATION - PNEUS
COLD TIRE PRESSION: FRONT 200 KPA/ 29 PSI - REAR 220KPA/ 32 PSI
MAXIMUM WEIGHT CAPACITY: 90KG/ 198 LBS
TIRE SIZE: FRONT 60/100/14 - REAR 80/100/12
PRESSION PNEUS À FROID: AVANT 2 BAR - ARRIÈRE, 2.2 BAR
POID EN CHARGE MAXIMUM: 90 KG
TAILLES PNEUS: AVANT 60/100/14 - ARRIÈRE 80/100/12
YCF FRANCE

WARNING - IMPORTANT
BEFORE OPERATING THIS VEHICULE, YOU MUST CHECK THE ENGINE OIL LEVEL.
AVANT DE DÉMARRER LE VÉHICULE, VÉRIFIER LE NIVEAU D'HUILE MOTEUR.
YCF FRANCE

WARNING - AVERTISSEMENT
MOTORBIKE NOT APPROVED ON PUBLIC AND ROAD. RESTRICTED USE ONLY ON CLOSED AND PRIVATE TRACKS. ALWAYS WEAR HELMET, EYE PROTECTION, PROTECTIVE CLOTHING AND/OR PROTECTION.
MOTORBIKE NOT SUITABLE FOR CHILDREN UNDER THE AGE OF 14. READ OWNER'S MANUAL CAREFULLY BEFORE USING THIS MOTORBIKE. NEVER USE THIS MOTORBIKE WITH PASSENGER. NEVER EXCEED THE CAPACITY OF 90 KG MAXIMUM LOAD. DO NOT TOUCH ANY MOVING PARTS AND HOT PARTS.
VÉHICULE NON HOMOLOGUE ET INTERDIT SUR LA VOIE PUBLIQUE. USAGE RESTREINT SUR CIRCUITS FERMÉS ET PRIVÉS. TOUJOURS PORTER UN CASQUE, DES LUNETTES, DES BOTTES, VÊTEMENTS DE PROTECTIONS, ET GANTS. NE PAS UTILISER LE VÉHICULE AVEC UN PASSAGER. NE PAS DÉPASSER 90 KG. LIRE ATTENTIVEMENT LE MANUEL DU PROPRIÉTAIRE AVANT UTILISATION. NE PAS TOUCHER LES PARTIES EN MOUVEMENT ET LES PARTIES CHAUDES.
CAPACITÉ DE CHARGE MAXIMALE DE 90 KG. NE PAS DÉCHIRER LES PARTIES MOBILES ET LES ZONES CHAUFFÉES. L'USAGER DOIT TENIR COMPTE DU NIVEAU DE VIBRATION IMPORTANT GÉNÉRÉ PAR L'USAGE DE LA MOTO.
YCF FRANCE
MOTOCYCLES
YCF

NE PAS OUBLIER DE FAIRE LES RESERVES D'USAGES AUPRÈS DU TRANSPORTEUR A RECEPTION DES COLIS SURLE BON DE LIVRAISON.
PLEASE CHECK THE CONDITION OF CRATE AT RECEIPT OF GOODS.
ANY DAMAGE SHOULD BE NOTED ON THE CONNOTE WITH THE FREIGHT CARRIER.

WARNING - AVERTISSEMENT
WARNING:
THE SHOCK ABSORBER IS NOT LOCKED
ATTENTION:
LA VIS DE L'AMORTISSEUR N'EST PAS SERRÉE

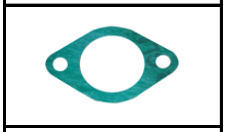

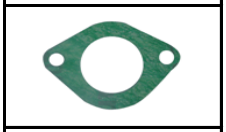

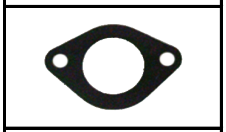

FACTORY
YCF MOTOCYCLES
YCF FRANCE

YCF
OWNER'S MANUAL
NAME / BRAND:
YCF
MODEL / TYPE :
SERIAL NUMBER :
MFG YEAR :
CE