FACTORY SP2 2018

Handle bar assembly

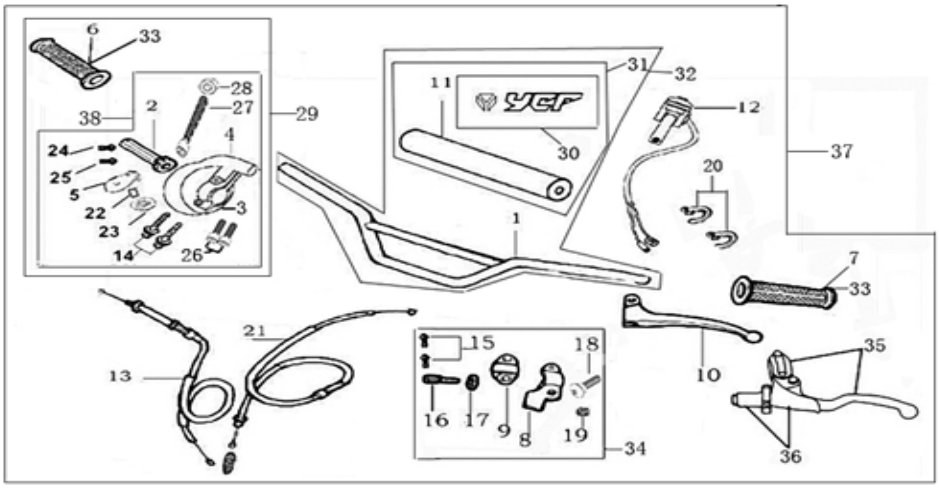

N°	Ref.	Description	Français	Qty/ Bike	MODEL	
1	YC110-0101-07-BK	Aluminium Handle Bar with bar "LOW" shape L=740mm BLACK	Guidon aluminium avec Barre "BAS" L=740mm NOIR	1	SM15012-17/SP112-17/SP212-17 /SP312-15	
2	YC110-01021-01	YCF Throttle Body 2012 BLACK	plastique poignée de gaz YCF 2012 NOIR	1	ALL BIKES 2012-2017	
3	YC110-01021-05	Lower Throttle Body Housing 2014	dessous poignée gaz 2014	1	P15014-117/SM15014-17/SP114-17/SP214-17/SP314-17	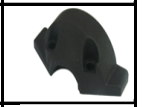
4	YC110-01021-03	Upper Throttle Body Housing YCF 2012	dessus poignée gaz YCF 2012	1	ALL BIKES 2012-2017	
5	YC110-01021-02	Upper Throttle Body Housing Cover YCF 2012	plastique du dessus poignée gaz YCF 2012	1	ALL BIKES 2012-2017	
6	YC110-01-01-GY	YCF Right Grip GREY	poignée caoutchouc droite YCF GRISE	1	ALL BIKES 2012-2017	
7	YC110-01-02-GY	YCF Left Grip GREY	poignée caoutchouc gauche YCF GRISE	1	ALL BIKES 2012-2017	
8	YC110-0108-06	Clutch upper bracket 2018 SILVER	cocotte basse embrayage 2018 SILVER	1	NEW 2018 SP218/SP318/BIGY F150A18/BIGY FD190MX18/BIGYZE190MX18	
9	YC110-0109-05	Clutch lower bracket 2018 SILVER	demi cocotte embrayage 2018 SILVER	1	F125L1617/F150L17/F12514-17/P12514-17/P15014-17/SM15014-17/SP114-17/SP214-17/SP314-17	

10	YC110-0110-03	Clutch lever 2018（with FB13-Φ8×Φ10×6-Cu 1EA+FB13-Φ8×Φ10×8-Cu 1EA）	levier embrayage 2018	1	NEW 2018 SP218/SP318/BIGY F150A18/BIGY FD190MX18/BIGYZE190MX18	
11	YC110-0116	Bar pad for Aluminium Handlebar with Bar L=195mm	Mousse guidon pour guidon alu avec barre L=195mm	1	SM15013-17/SP113-17/SP213-17/SP313-17	
12	YC110-0105-11	Kill Switch ON/OFF Waterproof P125 2017	Coupe circuit on off ETANCHE P125 2017	1	ALL BIKES2017（BUT50A/50E/SP3/FD190MX)	
13	YC110-0106	Throttle Cable L=840mm A+B=125	Cable gaz L=840mm A+B=125	1	ALL BIKES2012-2017(BUT50/F88s/F88se/LITE)	
	YC110-0143-01	RUBBER ON THROTTLE CABLE		1	ALL BIKES2017（BUT50E)	
14	GB5787-M6×22-G	Hex. Bolt with Flanged Face M6X22	vis M6X22	2	ALL BIKES2012-17(BUT50A)	
15	GB5787-M6×20-G	Hex. Bolt with Flanged Face M6X20	vis M6X20	2	F125L1617/F12512-16/P12514-17/P15014-17/SM15012-17/SP112-17/SP212-17/SP312-17	
	YC110-0144-01	Aluminium adjust screw for 2018 clutch lever	Molette Reglage aluminium pour Levier embrayage 2018	1	NEW 2018 SP218/SP318/BIGY F150A18/BIGY FD190MX18/BIGYZE190MX18	
	YC110-0121-01	Rubber for Aluminium adjust screw for 2018 clutch lever	Caoutchouc Molette reglage Levier embrayage 2018		NEW 2018 SP218/SP318/BIGY F150A18/BIGY FD190MX18/BIGYZE190MX18	
	YC110-0150-01	Clutch Adjust bolt for 2018 clutch lever	Tendeur cocotte pour Levier embrayage 2018	1	NEW 2018 SP218/SP318/BIGY F150A18/BIGY FD190MX18/BIGYZE190MX18	
18	HB06-M6×25-G	Hex.bolt with flanged M6X25	vis M6X25	1	NEW 2018 SP218/SP318/BIGY F150A18/BIGY FD190MX18/BIGYZE190MX18	
19	6183-06000B	Cltch Self-lock Nut M6	ecrou cloche embrayage M6	1	F125L1617/F12512-16/P12514-17/P15014-17/SM15012-17/SP112-17/SP212-17/SP312-17	
20	YC110-01-03-BK	Tape 150mm BLACK	colier maintien cable 150mm NOIR	2	ALL BIKES	
20	YC110-01-03-WH	Tape 150mm WHITE	colier maintien cable 150mm BLANC	2	ALL BIKES	
20	YC110-01-05-BK	Tape 350mm BLACK	colier maintien cable 350mm NOIR	5	ALL BIKES	
21	YC110-0107-01	Clutch Cable Assy. L=920mm A+B=60mm	cable embrayage L=920mm A+B=60mm	1	SP213-17	
22	YC110-0102-08	YCF Throttle cable Bearing Φ8×Φ16×5mm	Roulement poignee gas YCF Φ8×Φ16×5mm	1	ALL BIKES2012-2017	
23	YC110-0102-07	YCF Throttle cable guide pulley plastic Φ12×Φ16×Φ28×8mm	Roulette plastique Poignee Gas YCF Φ12×Φ16×Φ28×8mm	1	ALL BIKES2012-2017	

24	GB819-M4×12	Plus screw M4×12	vis M4×12	1	ALL BIKES2012-2017	
25	GB819-M4×20	Plus screw M4×20	vis M4×20	1	ALL BIKES2012-2017	
26	GB70-M6×20-B	Hex. Bolt M6x20 BLACK	vis M6x20 NOIR	2	ALL BIKES2012-2017	
27	GB70-M5×12	Hex. Bolt M5×12	vis M5×12	1	ALL BIKES2012-2017(BUT50A)	
30	YC110-0130-04	PVC Aluminium Handlebar with bar 185mm×178mm 2018 BLACK/WHITE	pvc mousse guidon Aluminium avec barre 185mm×178mm 2018 NOIR/BLANC	1	NEW 2018 SP218/ SP318 / SM15018	
31	YC110-0131-03	Complete Bar Pad for Chromolly Handlebar L=250mm 2018 BLACK	Mousse guidon complete pour guidon Chromolly L=250mm 2018 NOIR	1	NEW 2018 SP218/ SP318/ SM15018	
32	GALOW-05BK	Aluminium Handle Bar with bar pad and pvc L=780mm BLACK	Guidon aluminium complet avec Mousse et Pvc L=780mm NOIR	1	NEW 2018 SP218/ SP318 / SM15018	
33	PPC010-GY	YCF set of grip GREY	Paire de poignée caoutchouc YCF GRISE	1	ALL BIKES2012-2017	
34	YC110-0134-03	Clutch bracket Assy. 2014 SILVER	Cocotte embrayage complete 2014 SILVER	1	NEW 2018 SP218/SP318/BIGY F150A18/BIGY FD190MX18/BIGYZE190MX18	
35	YC110-0135-01	Cnc adjustable bracket with lever 2018 SILVER	Cocotte CNC reglage rapide avec levier embrayage 2018 SILVER	1	NEW 2018 SP218/SP318/BIGY F150A18/BIGY FD190MX18/BIGYZE190MX18	
36	YC110-0136-01	Rubber on clutch lever 2018	Caoutchouc levier embrayage 2018	1	NEW 2018 SP218/SP318/BIGY F150A18/BIGY FD190MX18/BIGYZE190MX18	
	YC110-0151-01	Rubber on clutch lever 2018 (Adjustable part)	Caoutchouc levier embrayage 2018 (Partie molette)		NEW 2018 SP218/SP318/BIGY F150A18/BIGY FD190MX18/BIGYZE190MX18	
38	YC110-01022-N	YCF Throttle Assy. 2014 without grip（with YC110-0102-08 1EA）	Poignee gaz reglable YCF 2014 nue	1	P1251617/P15014-17/SM15014-17/SP114-17/SP214-17/SP314-17	

Steering stem assembly

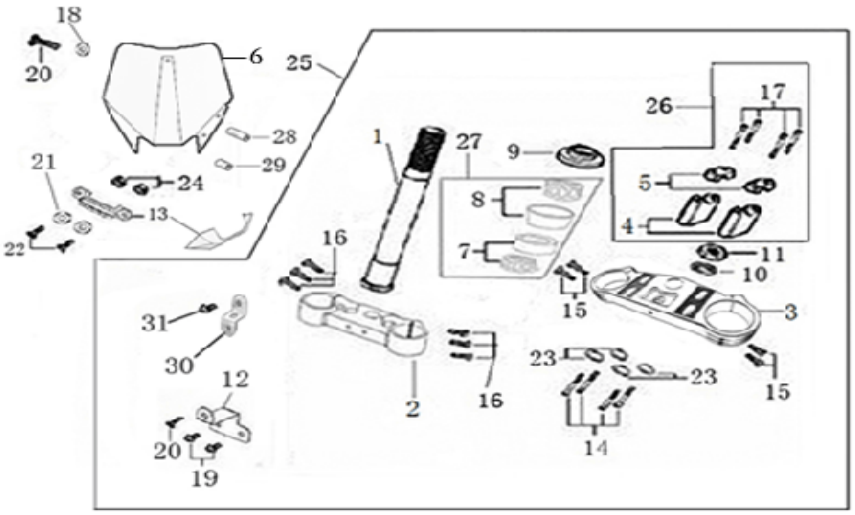

N	Ref.	Description	Français	Qty/ Bike	MODEL	
1	YC110-0201-03	Steering stem 233 mm	tige colonne direction 233 mm	1	ALL BIKES2012-17(BUT50A/F88s/F88se/LITE)	
2	YC110-0202-41-BK	Lower triple clamp 160 mm φ48mm 2014 BLACK	té fourche inferieur 160 mm φ48mm NOIR	1	SP217/SP315-17/BIGYF150MX17/FD190 MX17	
3	YC110-0201-41-BK	Top Triple Clamp 160 mm φ45mm (adjustable) 2014 BLACK	té fourche supérieur 160 mm φ45mm (ajustable) NOIR	1	SP217/	
4	YC110-0203-27	Lower Bar Mount CNC, adjustable Φ22.2 mm / height 55 mm SPI/SPII/SPIII BLACK	Pontet guidon inférieur ajustable Φ22.2 mm / hauteur 55 mm SPI/SPII/SPIII NOIR	2	SP113-17/SP213-17/SP313-15	
5	YC110-0202-04	Top Bar Mout CNC Φ22.2 mm/height 18mm START Type BLACK	pontet guidon supérieur Φ22.2 mm Type START NOIR	2	ALL BIKES2013-17 (BUTSP3/BIGYFD190MX)	
6	YC110-0212-07BK	Front Number Plate 2014 BLACK	PLAQUE AVANT 2014 NOIR		NEW 2018 F125s17/SM125s17/SP218	
7	297-46/23.5	Lower Taper roller bearing 46/23.5	roulement inférieur 46/23.5	1	ALL BIKES2012-17(BUT50A/F88s/F88se/LITE)	
8	297-46/22	Top Taper roller bearing 46/22	roulement supérieur 46/22	1	ALL BIKES2012-17(BUT50A/F88s/F88se/LITE)	
9	YC110-02-09	Top nut for steering φ52	écrou crantellé colonne direction φ52	1	ALL BIKES2012-2017	
10	YC110-02-10	Washer for steering stem nut Φ22.5×Φ36×0.7	joint colonne direction Φ22.5×Φ36×0.7	3	ALL BIKES2012-2017	
11	YC110-02-11	Nut for steering stem M22	écrou supérieur colnne direction M22	1	ALL BIKES2012-2017	
13	YC110-0214-01-WH	Break Line Retainer 2014 White（with GB9074.5-M4×10-W 1EA ）	guide durite sur plaque avant 2014 Blanc	1	ALL BIKES2014-2016(BUT50A/F88s/F88se/P88s /F125L)/ALL BIKES 2017 (BUT50A/F88s/F88se/P88s/F88 L)	
14	GB70-M8×30	Stud screw M8X30	vis M8X30	4	ALL BIKES2012-17（BUT50A）	
15	GB70-M6×25	Stud screw M6X25	vis M6X25	4	ALL BIKES2012-17（BUT50A）	
16	GB70-M6×20	Stud screw M6X20	vis M6X20	6	ALL BIKES2013-16(BUT50A)	
17	GB70-M8×25	Stud screw M8X25	vis M8X25	4	ALL BIKES2012-16（BUT50A）	
18	GB97-Φ6-W	flat washer φ6	rondelle φ6	1	ALL BIKES 2012-17	

19	GB5787-M6×16-W	Hex. Bolt with Flanged Face M6X16	vis M6X16	2	ALL BIKES2012-2017	
20	GB9074.5-M6×12-W	Plus screw M6X12 (for bottom front No plate)	vis m6x12 bas plaque No avant	1	ALL BIKES2014-2017(BUT50A/F88s/F88se/P88s)	
21	GB97-Φ4-W	flat washer φ4	rondelle φ4	1	ALL BIKES2012-17	
22	GB818-M4×10-W	Plus screw M4×10	vis M4×10	1	ALL BIKES2012-17	
23	GB93-Φ8-W	Spring washer Φ8mm	rondelle Φ8mm	4	ALL BIKES2012-17	
25	YC110-02-043-BK	Complete Triple Clamp (TOP45 / BOTTOM 48) adjustable bar mount, CP 2014 Type BLACK	Te Fourche Complet (TE SUP. 45 / TE INF.48) pontet ajustable Type CP 2014 NOIR	1	SP217	
26	YC110-0203-06	Set of Bar mount adjustable Φ22.2 mm/ height bottom 55mm SPI/SPII/SPIII BLACK（with GB70-M8×25 4EA+GB70-M8×30 4EA+GB93-Φ8-W 4EA）	jeu pontet guidon ajustable Φ22.2 mm / pontet bas 55 mm SPI/SPII/SPIII NOIR	1	SP113-17/SP213-17/SP313-15	
27	KRDIRECTION46	set of bearing for steering 46/23.5、46/22	kit rlt colonne direction 46/23.5、46/22	1	ALL BIKES2012-17(BUT50CC/F88s/F88se/F125L)	
30	YC110-0213-08	Number plate bracket 2014	support plaque avant 2014	1	ALL BIKES2014-2017(BUT50A/F88s/F88se/P88s/LITE)	
31	GB5787-M6×16-W	Hex. Bolt M6X16	vis M6×16	1	ALL BIKES2012-2017	
32	YC110-02-20	Washer for steering stem nut	joint colonne direction	1	ALL BIKES2015-2017（But50A/F88s/F88se/LITE)	

Front Fender

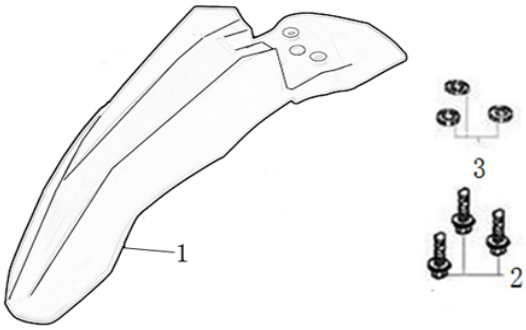

N	Ref.	Description	Français	Qty/ Bike	MODEL	
1	YC110-032-01BK	YCF Front Fender 2014 BLACK	GARDE BOUE AVANT 2014 NOIR		NEW 2018 F125s17/SM125s17/SP218	
2	GB5787-M6×20-W	Hex. Bolt with flanged M6X20	vis M6X20	3	ALL BIKES	
3	GB96-Φ6-W	Washer φ6×φ18mm	Rondelle φ6×φ18mm	3	ALL BIKES	
3	YC110-03-01	Rubber washer Φ6×Φ18×4mm	caoutchouc Φ6×Φ18×4mm	3	ALL BIKES	

Front & Rear absorber

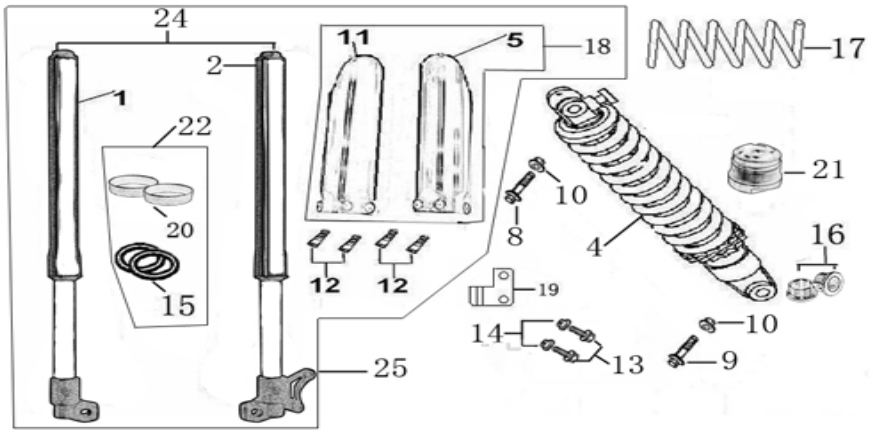

N	Ref.	Description	Français	Qty/ Bike	MODEL	
1	YC110-0401-09	Front right fork ZL735mm (adjustable) GREY	Tube fourche droit 735mm GRIS	1	SP113-17/SP213-17	
2	YC110-0402-09	Front left fork ZL735mm (adjustable) GREY	Tube fourche gauche 735mm GRIS	1	SP113-17/SP213-17	
4	YC110-0404-16	Shock absorber 330mmx640lbs SPI / SPII YELLOW	Amortisseur 330 x 640lbs SPI/SPII JAUNE	1	SP113-17/SP213-17	
5	YC110-04-015-BK	YCF Left front fork protection 735mm BLACK	Protection fourche YCF gauche 735 mm NOIR	1	P1251617/P1501617/SM1501617/SP1617	
8	GB5787-M12×45-W	Hex. Bolt with flanged M12X45	vis M12X45	1	P88s13-16/P12513-17/P15013-17/SM15013-17/SP113-17/SP213-17/SP313-17	
9	GB5787-M12×60-W	Hex. Bolt with flanged M12×60	vis M12×60	1	SP113-17/SP213-17/SP313-17	
10	GB6187-M12-W	Self-locking Nut M12	écrou M12	2	ALL BIKES2012-2017(BUT50A)	
11	YC110-04-024-BK	YCF Right front fork protection 735 mm BLACK	Protection fourche droite YCF 735 mm NOIR	1	P1251617/P1501617/SM1501617/SP1617	
12	GB5787-M6×12-W	Plus screw M6X12	vis M6X12	4	P88s13-15/P12513-17/P15013-17/SP13-17/SM15013-17	
13	GB5787-M6×16-W	Plus screw M6X16	vis M6X16	2	ALL BIKES2013-17(BUT50A)	
14	GB6170-M6-W	Nut M6	ecrou M6	2	P1251617/P1501617/SP1617/SM1501617	
16	YC110-0419-03	shock bottom spacer ENGI Φ12Φ14×6×11mm	entretoise amortisseur pour bras mono ENGI Φ12Φ14×6×11mm	4	SP11617/SP21617/SP31617/BIGYF150MX17/FD190MX17	
18	PFYCF12-BK	YCF set of fork protection 735mm 2012 black	jeu protection fourche YCF noir	1	P1251617/P1501617/SM1501617/SP1617	
19	YC110-0403-05	oil steel line retainer on left front fork 2016	passe durite sur protection fourche gauche 2016	1	P1251617/P1501617/SP1617/SM1501617/BIGY2017	
24	YC110-0400-10	Pair of fork 735mm ZL （Adjustable） GREY	Jeu de fourche 735mm ZL Ajustable GRIS	1	SP113-17/SP213-17	
Front Brake Assy						

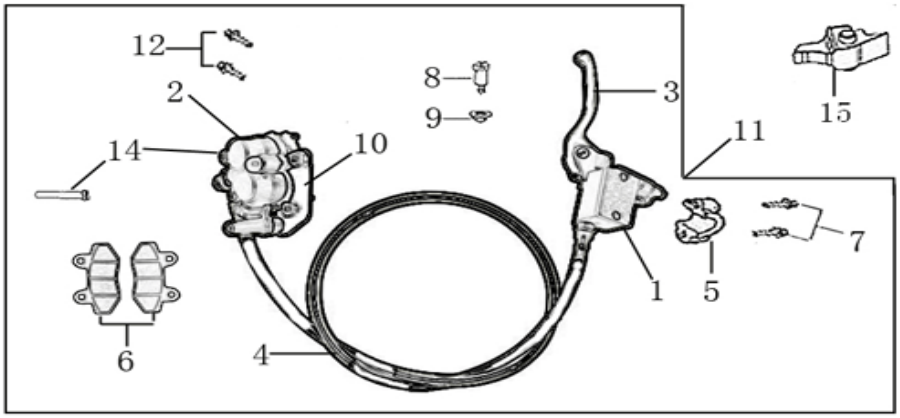

N	Ref.	Description	Français	Qty/ Bike	MODEL	
1	YC110-0501-0104	Front Brake Reservoir for 2 pump Φ10 2016	maitre cylindre frein avant pour étrier 2 pistons Φ10 2016	1	P1251617/P1501617/SP1617/SM1501617	
2	YC110-0501-0207	Front Brake caliper for 2 pump w/t abestos Φ 10 2016	étrier frein avant double pistons sans amiante Φ10 2016	1	SP21617/SP31617/BIGYF150MX17/FD190MX17	
3	YC110-0501-014	Front brake lever 2014 With notch	LEVIER FREIN 2014	1	ALL BIKES2014-17(BUT50A)	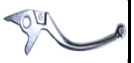
4	YC110-0501-0313	Front brake steel line L=1110mm Φ10/Φ10 BLACK 2016	durite frein avant L=1110mm Φ10/Φ10 NOIR 2016	1	P1251617/P1501617/SM1501617/SP11617/SP21617	
5	YC110-0501-022	Brake perch bracket for double pump	demi cocotte frein avant pour frein double pistons	1	ALL BIKES2012-17(BUT50A)	
6	YC110-0501-0416	Front Brake pads for double pump brake with copper substrate 2016	jeu plaquette frein avant pour frein 2 pistons SANS AMIANTE 2016	2	SP21617/SP31617/BIGYF150MX17/FD190MX17	
7	GB5787-M6×22-G	Hex.bolt with flanged M6X22	vis M6X22	2	ALL BIKES2012-17(BUT50A)	
8	HB06-M6×25-G	Hex.bolt with flanged M6X25	vis M6X25	1	ALL BIKES2012-17(BUT50A)	
9	GB6177-M6-G	Self-locking nut M6	écrou M6	1	ALL BIKES2012-17(BUT50A)	
10	YC110-0501-037	Bracket for front brake SP2/SP3 2016	patte frein avant etrier SP2/SP3 2016	1	SP21617/SP31617/BIGYF150MX17/FD190MX17	
11	YC110-0501-21	front brake assy 2 pumps L=1110mm Φ10/10 w/t abestos 2016	kit frein avant 2 pistons avec gaine plastic noire L=1110mm Φ10/10 sans amiante	1	SP21617	
12	GB70-M6×30-W	Stud screw M6X30	vis M6X30	2	ALL BIKES2012-17（BUT50A）	
14	YC110-0555-01	caliper screw for front brake L=55mm Army green	vis plaquette frein avant L=55mm	1	SP21617/SP31617/BIGYF150MX17/FD190MX17	

15	YC110-0502-01	rubber for brake lever	caoutchouc levier frein avant	1	ALL BIKES2014-17(BUT50A)	

Front Wheel Assy

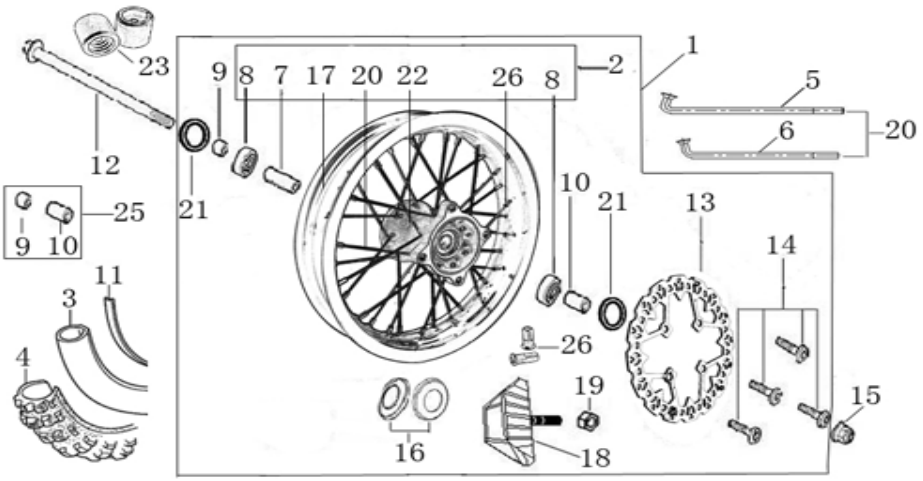

N	Ref.	Description	Français	Qty/ Bike	MODEL	
1	YC110-0601-5F-BK	Complete ALUMINIUM Front wheel 1.4x 14' with disk CNC hub BLACK / SILVER Rim	Roue avant complète ALUMINIUM 1.4x14' avec disque moyeux CNC NOIR / Jante SILVER	1	NEW 2018 SP218/SP318	
2	YC110-0602-5D-BK	Complete ALUMINIUM Front wheel 1.4x 14' without disk CNC hub BLACK / SILVER Rim 2018	roue avant complète ALUMINIUM 1.4x14' sans disque moyeux CNC NOIR / Jante SILVER 2018	1	NEW 2018 SP218/SP318	
3	CHAMBRE14	Tube for front tire 60/100-14' GL	chambre air 14' GL	1	F125L1617/F150L17//F12512-16/F125s12-17/F125se15-17/P12513-17/P15013-17/SP13-17	
	FB6170-M8-Cr	Tire valve nut M8	Ecrou M8 pour chambre a air	1	ALL BIKES	
4	60/100/14ARRO	Front tyre 60/100/14 ARRO 2015	pneu avant 60/100/14 ARRO 2015	1	SP21617/SP31617	
7	YC110-0607-03	Front axle bushing φ17×Φ25×46	entretoise central roue avant φ17×Φ25×46	1	SP21617/SP31617	
8	96140-6003-2Z-01	Ball bearing 6003 Φ35Φ17×10	roulement roue 6003 Φ35Φ17×10	3	NEW 2018 SP218/SP318	
9	YC110-06-048	Front wheel spacer right φ15×Φ22×37.5mm with STEP 2016	entretoise roue avant droite φ15×Φ22×37.5mm	1	SP21617/SP31617	
10	YC110-06-056	Front wheel spacer left φ15×Φ22×47mm with STEP 2016	entretoise roue avant gauche φ15×Φ22×47mm	1	SP21617/SP31617	
11	YC110-06-01	tire lining for 1.4x14'	fond jante av 14'	1	F125L1617/F150L17/F12512-16/F125s12-17/F125se15-17/P12513-17/P15013-17/SP12-17	

12	YC110-06-061	Front Axle 215 mm with Self-locking nut M14 for Marzocchi style fork	axe de roue avant L=215 mm marzochci avec ecrou M14	1	ALLBIKES2013-17(BUT50A/SM)	
13	YC110-0513-02	Front disk φ220 mm 2016	disque frein avant φ220 mm 2016	1	ALL BIKES 2016-17(BUT50A/F88s/F88se/F88L)	
14	GB70.2-M8×16	Screw for disk M8X16	vis disque frein M8X16	4	ALL BIKES2016-17 (BUT50A)	
15	GB6187-M14-W	Self-locking nut M14	écrou roue avant M14	1	ALL BIKES2012-17(BUT50A)	
17	YC110-0601-012SI	ALUMINIUM 7116 Rim for Front wheel 1.4×14' 7116 SILVER	cerceau roue av 1,4x14' ALUMINIUM 7116 SILVER	1	NEW 2018 SP218/SP318	
18	GRIPSTERAV-R	Reinforced gripster - 1.40	Gripster renforce - 1.40		NEW 2018 /BIGYF15018/190C18 / BIGYZE190MX18	
19	GB6170-M8-W	Nut M8	ecrou M8	1	SP12-17/BIGYF150MX17/FD190MX17	
20	JR14-15.0	set of front spoke 14' (147mm×24+150mm×8)	Jeu rayon avant 14' (147mm×24+150mm×8)	1	SP21617/SP31617	
21	YC110-0611	OIL SEAL Φ23×Φ35×5	joint spy roue Φ23×Φ35×5	2	ALL BIKES2013-17(BUT50A)	
22	YC110-0622-05-BK	YCF Front hub CNC BLACK 2018	YCF Moyeux avant CNC NOIR 2018	1	NEW 2018 SP218/SP318	

Fuel Tank

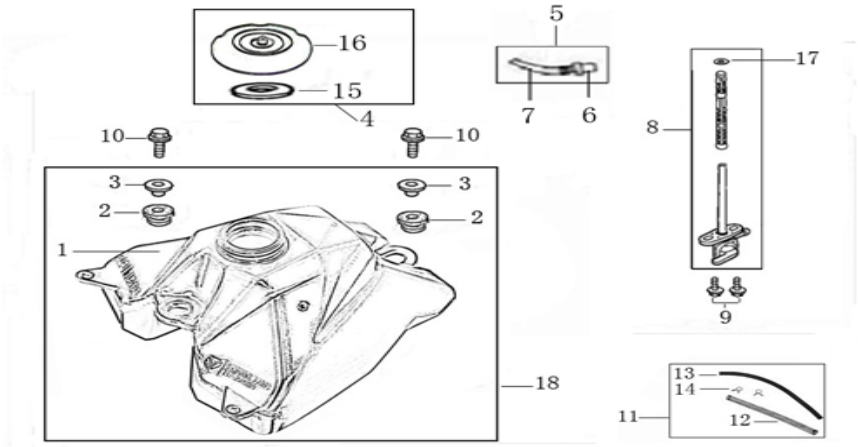

N	Ref.	Description	Français	Qty/ Bike	MODEL	
1	YC110-0701-01	YCF Fuel tank with YC110-1910 1EA (suitable for pre 2013 bikes)	Reservoir YCF (Adaptable pour motos avant 2013)	1	ALL BIKES2013-17（BUT50A）	
2	YC110-07-01	Cushion for fuel tank	caoutchouc pour reservoir	2	ALL BIKES2011-17	

3	YC110-07-02	Washer for fuel tank Φ12×Φ30×11mm	entretoise pour reservoir Φ12×Φ30×11mm	2	ALL BIKES2011-17	
4	YC110-0702-01	YCF Tank cap plastic 2013	Bouchon reservoir plastique YCF 2013	1	ALL BIKES2013-17	
5	YC125-0704-BK	Fuel tank valve BLACK	Valve prise air NOIR	1	ALL BIKES	
6	YC110-0704-BK	Cap of Fuel tank valve BLACK	Capuchon Valve prise air NOIR	1	ALL BIKES	
7	YC110-0705-BK	Fuel tank valve Hose L=40mm BLACK	Durite caoutchouc Vale prise air L=40mm NOIRE	1	ALL BIKES	
8	YC110-0703	Fuel cock assy.	robinet essence	1	ALL BIKES	
9	GB5787-M6×16-W	Hex. Bolt with flanged M6X16	vis M6X16	2	ALL BIKES	
10	GB5787-M8×30-B	screw M8X30 BLACK	vis M8x30 NOIR	2	P88s13-15/P12513-17/P15013-17/SM15013-17/SP13-17	
11	YC110-0706	fuel tank rubber line + spring Φ4.5×Φ8.5×210mm	durite reservoir avec ressort Φ4.5×Φ8.5×210mm	1	ALL BIKES	
12	YC110-07061	fuel tank lspring L=180mm	ressort durite reservoir L=180mm	1	ALL BIKES	
13	YC110-07062	fuel tank rubber line Φ4.5×Φ8.5×210	durite reservoir Φ4.5×Φ8.5×210	1	ALL BIKES	
14	YC110-07063	Holding ring	collier FILTRE	2	ALL BIKES	
15	YC110-0720-02	Rubber mat for tank cap plastic Φ14×Φ52×2mm Oil proof	Caoutchouc bouchon reservoir YCF Φ14×Φ52×2mm	1	ALL BIKES2013-17	
17	YC110-0717	O-RING,Φ11×3mm For Fuel tank	Joint Thorique Φ11×3mm pour Reservoir	1	ALL BIKES2013-17（BUT50A/50E）	
18	YC110-0718	YCF Complete fuel tank suitable for pre 2013 bikes（with YC110-07-01 2EA+YC110-07-02 2EA+YC110-1910 1EA)	Reservoir complet YCF 2013 (Adaptable pour motos avant 2013)	1	ALL BIKES2013-17（BUT50A/50E）	

Air Filter

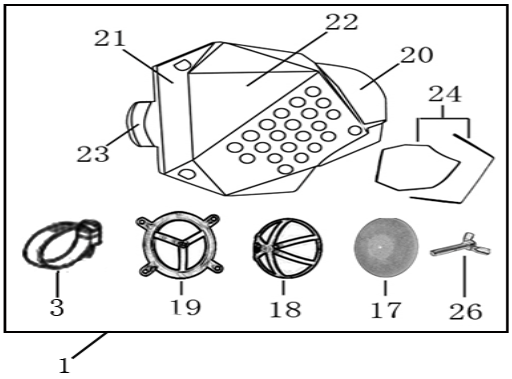

N	Ref.	Description	Français	Qty/ Bike	MODEL	
1	YC110-08-02	Air box assy 2013 with YCF LOGO	Boite a air complete YCF 2013	1	SP113-17/SP213-17/SP315013-17/BIGY2017(BUT190MX)	
3	YC110-0805	Holding ring φ27-φ51mm	collier Filtre φ27-φ51mm	1	F88s12-16/F88se15-17/F88L17/F125L17/F12512-16/F125s12-17/F125se15-17/SP12-17/SM125s12-17	
17	YC110-0817-03	YCF Air filter Foam 2018 DOUBLE THICKNESS	Mousse filtre a air YCF 2018 DOUBLE EPAISSEUR	1	NEW 2018 SP2A18/SP3A18/BIGY2018	
18	YC110-08-012	Top support for YCF air filter foam	support exterieur pour mousse filtre a air YCF	1	P1251617/P1501617/SP12-17/SM1501617/BIGY2017	
19	YC110-08-013	Inside support for YCF air filter foam	support interieur pour mousse filtre a air YCF	1	P1251617/P1501617/SP12-17/SM1501617/BIGY2017	
20	YC110-0820-01	Rear part of YCF air box 2015	Boitie arriere boite a air YCF 2015	1	SP113-17/SP213-17/SP315013-15/BIGY2017(BUT190MX)	
21	YC110-08-015	Front case of YCF air box	Boitie avant boite a air YCF	1	SP12-17/BIGY2017	
22	YC110-08-026	Cover with logo of YCF air box 2013	Couvercle cote boite a air YCF avec logo 2013	1	SP13-17/BIGY2017	
23	YC110-08-017	Rubber link between air box and carb for YCF air box φ 40 mm	manchon boite a air YCF φ 40 mm	1	SP112-17/SP212-17/SP315012-15	
24	YC110-08-019	Cover Rubber Gasket of YCF air box	Joint Caoutchouc pour couvercle cote pour boite a air YCF	1	SP13-17/BIGY2017	
24	YC110-08-020	Rubber Gasket for Rear part / front part of YCF air box	Joint Caoutchouc pour Boitie avant / Boitie arriere pour boite a air YCF	1	SP13-17/BIGY2017	
24	YC110-08-021	Kit Rubber Gasket for Rear part / front part of YCF air box	Kit Joint pour Boitie avant / Boitie arriere pour boite a air YCF	1	SP13-17/BIGY2017	
26	GB62-M6×30-W	Butterfly screw M6×30	vis M6x30	1	P1251617/P1501617/SM1501617/SP13-17/BIGY2017	
Foot Peg assy						

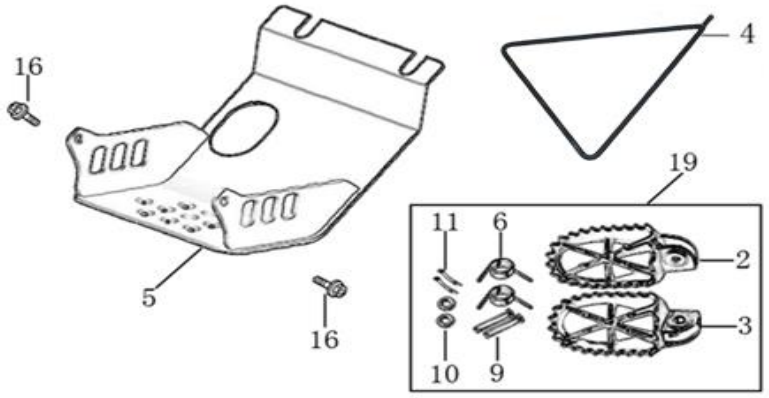

N	Ref.	Description	Français	Qty/ Bike	MODEL	
2	YC110-0902-02	Right foot peg Inox Large	Repose pied Inox droit Large	1	SP113-17/SP213-17/SP313-17	
3	YC110-0903-02	Left foot peg Inox Large	Repose pied Inox gauche Large	1	SP113-17/SP213-17/SP313-17	
4	YC110-190-01	Side stand SP 2015	Triangle support SP 2015	1	SP115-17/SP215-17/SP315-17	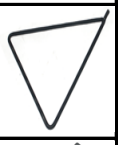
5	YC110-207-04	YCF2014 Engine skid plate Steel SPII	NEW SABOT ACIER FACTORY SPII	1	SP214-17/BIGY125MX17/150MX17/F150MX17	
6	YC110-0906	Spring for inox foot peg (left/right) Φ2×Φ16×35MM	ressort repose pied (droit/gauche) inox Φ2×Φ16×35MM	2	SP13-17/BIGYF150MX17/FD190MX17	
9	GB882-Φ8×45-W	shaft pin for inox footpegs φ8×47.5	axe repose pied inox φ8× 47.5	2	SP113-17/SP213-17/SP313-17	
10	GB97-Φ8-W	flat washer φ8×16×1	rondelle φ8×16×1	2	ALL BIKES2011-17	
11	GB91-Φ2×25-W	Cotter pin 2.0×25	goupille 2.0×25	2	ALL BIKES2013-17	
16	GB5787-M6×16-W	screw M6X16 for skid plate	vis sabot M6X16	2	ALL BIKES2012-17(BUT50A)	
19	YC110-0902/05	Inox foot pegs set Large	Jeu repose pied inox Large	1	SP13-17/BIGYF150MX17/FD190MX17	
Swing Arm assy						

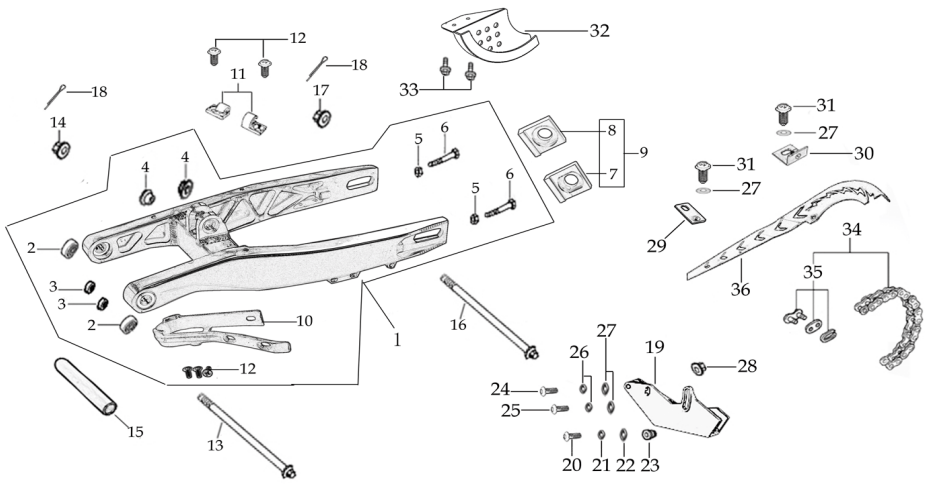

N	Ref.	Description	Français	Qty/ Bike	MODEL	
1	YC110-10015	Mono swing arm YCF Aluminium 420mm 2014	bras oscillant mono YCF Aluminium 420mm 2014	1	SP11415/SP214-17/SP314-17	
2	6001/28-15-08	Swing arm bearing φ28xφ15x8mm	roulement bras oscillant φ28xφ15x8mm	2	NEW 2018 SP218/SP318	
3	YC110-1001-0102	Sleeve for swing arm Φ26.5×Φ12.5×11×9	entretoise bras oscillant/amorto Φ26.5×Φ12.5×11×9	2	SP112-15/SP212-17/SP312-17/BIGYF150MX17/FD190MX17	
4	YC110-1001-021	Sleeve for swing arm φ12xφ16xφ24×10	entretoise bras oscillant/amorto φ12xφ16xφ24×10	2	SP112-15/SP212-17/SP312-17/BIGYF150MX17/FD190MX17	
5	GB5783-M8×40-W	Exterior hex. Bolt M8X40	vis tendeur chaine M8x40	2	ALL BIKES2012-17（BUT50A）	
6	FB6170-M8-W	Hex. Nut M8	ecrou tendeur chaine M8	2	ALL BIKES2012-17(BUT50A)	
7	YC110-11-094-SI	Block axle left SPI/SPII/SPIII SILVER	Tendeur chaine gauche SPI/SPII/SPIII SILVER	1	SP11415/SP214-16/SP314-16	
8	YC110-11-093-SI	Block axle right SPI/SPII/SPIII SILVER	Tendeur chaine droit SPI/SPII/SPIII SILVER	1	SP11415/SP214-17/SP314-17/BIGYF150MX17/FD190MX17	
9	YC110-11-095-SI	Set of Block axle SPI/SPII/SPIII SILVER	Jeu tendeur chaine SPI/SPII/SPIII SILVER	1	SP114-15/SP214-17/SP314-17/BIGYF150MX17/FD190MX17	
10	YC110-10-025	Chain slider YCF Aluminium swing arm 420mm PU	patin chaine YCF long pour Bras oscillent Aluninium YCF 420mm PU	1	P12515-17/P15015-17/SP12-17/SM15015-17/BIFY2017	
11	YC110-10-014-WH	Rear brake clip for WHITE	attache durite frein arriere BLANC	1	SP112-15/SP212-17/SP312-17/BIGYF150MX17/FD190MX17	
12	GB819-M6×12-W	Plus screw M6X12	vis m6x12	5	ALL BIKES2012-14/SP115/SP215-17/SP315-17/BIGYF150MX17/FD190MX17	
13	YC110-10-033	Swing arm shaft L=236mm	axe bras oscillant φ3 L=236mm	1	SP113-17/SP213-17/SP313-17	

14	GB6187-M12-W	Self locking nut M12	ecrou bras oscillant M12	1	ALL BIKES2012-17	
15	YC110-1023	Central spacer swing arm CP/FP 2012 Aluminium	Entretoise centrale de bras oscillent YCF CP/FP 2012	1	SP112-15/SP212-17/SP312-17	
16	YC110-11-075	Rear wheel axle L=230mm with Self locking nut M14	axe roue arriere L=230mm avec ecrou M14	1	SP112-15/SP212-17/SP312-17/BIGYF150MX17/FD190 MX17	
17	GB6187-M14-W	Self locking nut M14	ecrou axe roue arrière M14	1	ALL BIKES2012-17（BUT50A）	
18	GB91-Φ2×35-W	Slipt Pin Φ2x35mm	goupille Φ2x35mm	2	SP113-17/SP213-17/SP313-17	
19	YC110-1004	YCF chain guide assy for High class range BLACK	guide chaine YCF pour haut de gamme NOIR	1	P12515-17/P15015-17/SP12-17/SM15015-17/BIFY2017	
20	GB70.2-M5×16	Plus screw M5X16	vis M5X16	1	P12515-17/P15015-17/SP12-17/SM15015-17/BIFY2017	
21	GB93-Φ5-W	Standard spring washer φ5	rondelle φ5	1	P12515-17/P15015-17/SP12-17/SM15015-17/BIFY2017	
22	GB97-Φ5-W	Flat washer φ5	rondelle φ5	1	P12515-17/P15015-17/SP12-17/SM15015-17/BIFY2017	
23	GB6100-M5-CW	Adj. nut for YCF chain guide Φ5×Φ7×Φ10×13mm	Vis reglage guide chaine YCF Φ5×Φ7×Φ10×13mm	1	P12515-17/P15015-17/SP112-17/SP212-17/SP312-17/SM15015-17	
24	GB70-M6×20	Stud screw M6X20	vis M6X20	1	P12515-17/P15015-17/SP12-17/SM15015-17	
25	GB70-M6×25	Stud screw M6X25	vis M6X25	1	P12515-17/P15015-17/SP12-17/SM15015-17	
26	GB93-Φ6-W	Standard spring washer φ6	rondelle φ6	2	P12515-17/P15015-17/SP12-17/SM15015-17	
27	GB97-Φ6-W	Flat washer φ6	rondelle φ6	2	P12515-17/P15015-17/SP12-17/SM15015-17	
28	GB6177-M6-W	Hex. Nut M6	ecrou tendeur chaine M6	1	ALL BIKES2013-15(BUT50A)/ALL BIKES2016-17(BUT50A/SP)	
29	YC110-0600-02	Chain box protection support	Support Protection chaine plastique	1	ALL BIKES2012-2017(BUT50A)	
30	YC110-0600-021	Chain box protection support	Support Protection chaine plastique	1	ALL BIKES2012-2017(BUT50A)	
31	GB818-M6×12-W	Plus screw M6x12	vis M6x12	3	ALL BIKES2012-17(BUT50A)	
27	GB97-Φ6	Flat washer φ6	rondelle φ6	3	ALL BIKES2012-17	
32	YC110-1010	YCF rear disk protection BLACK	protection disk arriere YCF NOIR	1	SP112-17/SP212-17/SP312-17	
33	GB5787-M6×12-W	Plus screw M6X12	vis M6X12	2	SP112-17/SP212-17/SP312-17	

34	420DX-108T-X	Chain 420DX-108T extra strong	Chaine420 108 maillons renforcee	1	SP113-15/SP212-17/SP312-17	
35	AR-420	Chain link	Attache rapide chaine	1	All BIKES2012-17(BUT50E)	
36	YC110-0600-01	Chain box protection	Protection chaine plastique	1	ALL BIKES2012-2015(BUT50A)/ALL BIKES2016-17(BUT50A/F88s/F88se/BIGY)	

Rear Wheel Assy

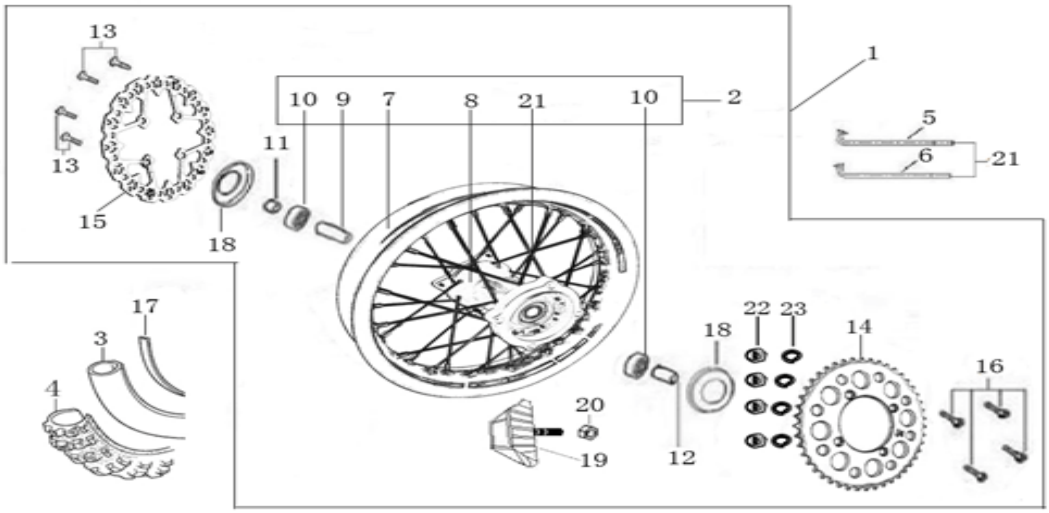

N	Ref.	Description	Français	Qty/ Bike	MODEL	
1	YC110-1101-2H-BK	Complete ALUMINIUM Rear wheel 1.85-12' with disk CNC BLACK hub SILVER Rim	roue arriere complète ALUMINIUM 1.85-12 avec disque moyeux cnc NOIR / Jante SILVER	1	NEW 2018 SP2A18/SP3A18	
2	YC110-1102-2F-BK	Complete ALUMINIUM Rear wheel 1.85-12 without disk. CNC hub BLACK / SILVER Rim 2018	roue arriere complète ALUMINIUM 1.85-12 sans disque moyeux CNC NOIR / Jante SILVER 2018	1	NEW 2018 SP2A18/SP3A18	
3	CHAMBRE12	Tube for Rear tire 3.00-12' GL	chambre air 12' standard GL	1	ALL BIKES2012-2017(BUT50A/F88s/F88se/P88s)	
	FB6170-M8-Cr	Tire valve nut M8	Ecrou M8 pour chambre a air	1	ALL BIKES	
4	80/100/12ARRO	Rear tyre 80/100/12 ARRO 2015	Pneu arriere 80/100/12 ARRO 2015	1	SP21617/SP31617	
7	YC110-1101-01SI	ALUMINIUM 7116 Rim 1.85×12' Silver	cerceau roue 1,85x12' ALUMINIUM 7116 Silver	1	SP218/SP318	
8	YC110-1122-06-BK	YCF Rear hub CNC BLACK 2016	Moyeux arriére CNC 2016 NOIR	1	SP217/SP31617/	
9	YC110-1109-07	Rear hub axle bushing φ17×Φ25×67	entretoise intérieur moyeux arrière φ17×Φ25×67	1	SP21617/SP31617/BIGYF150MX17/FD190MX17	

8	96140-6003-2Z-01	Ball bearing 6003 Φ35Φ17×10	roulement roue 6003 Φ35Φ17×10	3	NEW 2018 SP218/SP318	
11	YC110-11-047	Rear wheel spacer right φ15×φ22×43 with step	entretoise roue arriere droite φ15×φ22×43	1	NEW 2018 SP2A18/SP3A18	
12	YC110-11-057	Rear wheel spacer left φ15×φ22×63mm with step	entretoise roue arriere gauche φ15×φ22×63mm	1	NEW 2018 SP2A18/SP3A18	
13	GB70.2-M8×16	Screw for disk M8X16	vis disque frein M8X16	4	ALL BIKES2012-17（BUT50A）	
14	YC110-11-062/45	YCF Driven sprocket 420-45T 5 holes 2016	couronne acier 45T YCF 5 TROUS	1	SP11617/SP21617/SP31617	
15	YC110-1115-01	Rear Brake disc φ200mm 2016	Disque frein arrière φ200 mm 2016	1	ALL BIKES 2016-17(BUT50A)	
16	BT08-M8×30-W	Exterior Hex.Bolt M8×30	vis couronne M8×30	4	SP117/SP217/SP317/BIGY 2017	
17	YC110-11-01	tire lining 12"	fond jante 12'	1	ALL BIKES2012-2015(BUT50A/F88s/F88se/P88s)/ALL BIKES2016-17(BUT50A/F88s/F88se/F88L)	
18	YC110-0611	oil seal Φ23×Φ35×5	joint spy roue Φ23×Φ35×5	2	ALL BIKES2013-17(BUT50A)	
19	GRIPSTERAR-R	Reinforced gripster - 1.85	Gripster renforce - 1.85		NEW 2018 SP2A18/SP3A18/BIGYF15018/FD19018/ZE19018	
20	GB6170-M8-W	Nut M8	ecrou M8	1	SP112-17/SP212-17/SP312-17/BIGYF150MX17/FD190MX17	
21	JR12-13.5	set of spoke 12' (125mm×32)	jeu rayon arrière 12' (125mm×32)	1	SP213-17/SP313-17/SM13-17	

REAR BRAKE

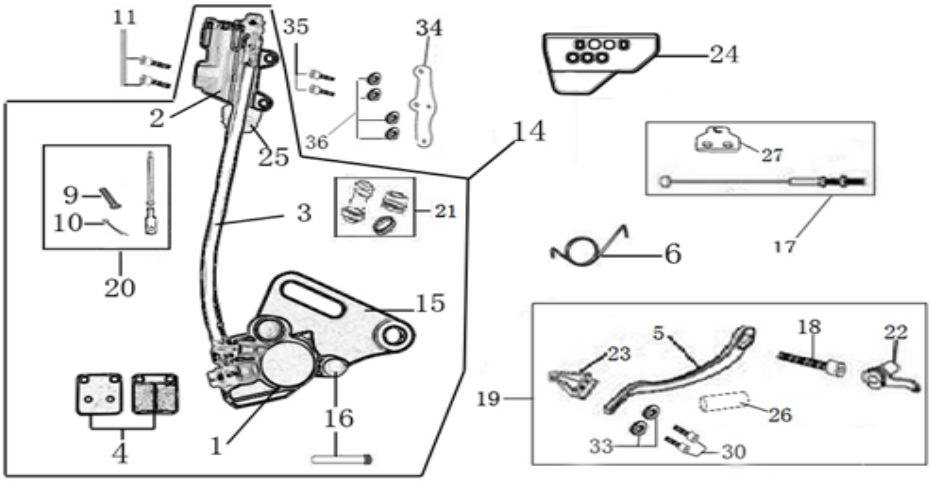

N	Ref.	Description	Français	Qty/ Bike	MODEL	

1	YC110-1201-07	Rear Caliper 1 pistons Φ10 2016	étrier frein arrière 1 piston Φ10 2016	1	SP21617/SP31617/BIGYF150MX17/FD190MX17	
2	YC110-1201025	Rear reservoir φ 10mm（with stick L=45mm）SP 2016	maitre cylindre frein arrière avec embout durite φ 10mm	1	SP11617/SP21617/SP31617	
3	YC110-1201050	Oil steel tube L=465mm Φ10/Φ10 SP2/SP3 2016 oil connection 85°	durite frein arrière L=465mm Φ10/Φ10 SP2/SP3 2016	1	SP21617/SP31617	
4	YC110-1204-02	Friction pad for 1 piston brake w/t abestos with copper substrate 2016	plaquette frein arrière 1 piston SANS AMIANTE 2016	2	SP21617/SP31617/BIGYF150MX17/FD190MX17	
5	YC110-1205-05	Aluminium brake pedal + 3 cm CP/FP12 / SPI / SPII / SPIII	Pédale de frein + 3 cm Aluminium CP/FP12 / SPI / SPII / SPIII	1	SP13-17/BIGYF150MX17/FD190MX17	
6	YC110-21-06	Spring for Steel brake pedal' SPII/SPIII 2015	ressort pour pédale de frein Acier SPII/SPIII 2015	1	SP15-17/BIGYF150MX17/FD190MX17	
7	FB20-10×14×2-W	Flat washer Φ10×Φ13.5×2	rondelle Φ10×Φ13.5×2	1	SP15-17/BIGYF150MX17/FD190MX17	
9	GB882-Φ7×16-W	Pin shaft 7x16mm	axe 7x16mm	1	ALL BIKES2012-17 (BUT50A)	
10	GB91-Φ1.6×16-W	Split pin 1.6x16mm	goupille 1.6x16mm	1	ALL BIKES2012-17 (BUT50A)	
11	GB70-M6×20	Hex. Bolt M6x20	vis M6x20	2	ALL BIKES2012-17 (BUT50A)	
14	YC110-12012-26	Rear brake aasy 1 piston Φ10/Φ10 L=465mm SP2/SP3 2016	Kit frein arriere 1 piston avec gaine plastic Φ10/Φ10 L=465mm SP2/SP3 2016	1	SP21617/SP31617	
15	YC110-1201-09	Rear brake bracket 2016	patte fixation étrier frein arriere 2016	1	SP21617/SP31617/BIGYF150MX17/FD190MX17	
16	YC110-0555	Rear Brake pads Screw L=50mm Army green	Vis plaquette AR L=50mm	2	SP21617/SP31617/BIGYF150MX17/FD190MX17	50mm
18	GB70.1-M10×35-B	Nut for brake pedal M10X35	vis pour pédale frein M10X35	1	P88s16/P1251617/P1501617/SM1501617/SP1617/BIGY2017	
19	YC110-219-02	complete brake pedal SP 2016	Pedale de frein complete SP 2016	1	SP115-17/SP215-17/SP315-17/BIGYF150MX17/FD190MX17	
21	YC110-120111	rubber for rear caliper SP2/SP3 2016	jeu de caoutcgouc d'etrier frein arriere SP2/SP3 2016	1	SP21617/SP31617/BIGYF150MX17/FD190MX17	
22	YC110-1222-01	Brake pedal fixation for Aluminium pedal SPII/SPIII 2015 BLACK	Cylindre pédale de frein Aluminium "externe" SPII/SPIII 2015 NOIR avec roulements	1	SP115-17/SP215-17/SP315-17/BIGYF150MX17/FD190MX17	
	6900Z	Ball bearing 6900Z Φ10×Φ22×6mm	roulement Cylindre pedale 6900Z Φ10×Φ22×6mm	2	SP115-17/SP215-17/SP315-17/BIGYF150MX17/FD190MX17	

	FB13-10×14×6	bushing 10×14×6MM	entretoise 10×14×6MM	1	SP115-17/SP215-17/SP315-17/BIGYF150MX17/FD190MX17	
23	YC110-21-11	Aluminium brake pedal end cap	embout pédale de frein Aluminium	1	SP12-17/BIGYF150MX17/FD190MX17	
25	YC110-12025-01	Rubber for REAR RESERVOIR PUSH STICK 2016	Caoutchouc tige maitre cylindre frein arrier 2016	1	P1251617/P1501617/SP1617/SM1501617/BIGY2017	
30	GB70-M6×25	Hex. Bolt M6×25	vis M6×25	2	SP112-17/SP212-17/SP312-17/BIGYF150MX17/FD190MX17	
33	GB93-Φ6-W	Standard spring washer φ6	rondelle φ6	2	SP112-17/SP212-17/SP312-17/BIGYF150MX17/FD190MX17	
34	YC110-1215-06	Mount for rear break reservoir "extern" 2017	fixation maitre cylindre frein arriere "externe" 2017	1	P12517/P15017/SM15017/SP17/BIGY2017	
35	GB70-M6×16	Hex. Bolt M6x16	vis M6x16	2	P12517/P15017/SM15017/SP17/BIGY2017	
36	GB93-Φ6	Standard spring washer φ6	rondelle φ6	4	P12517/P15017/SM15017/SP17/BIGY2017	

Exhaust system

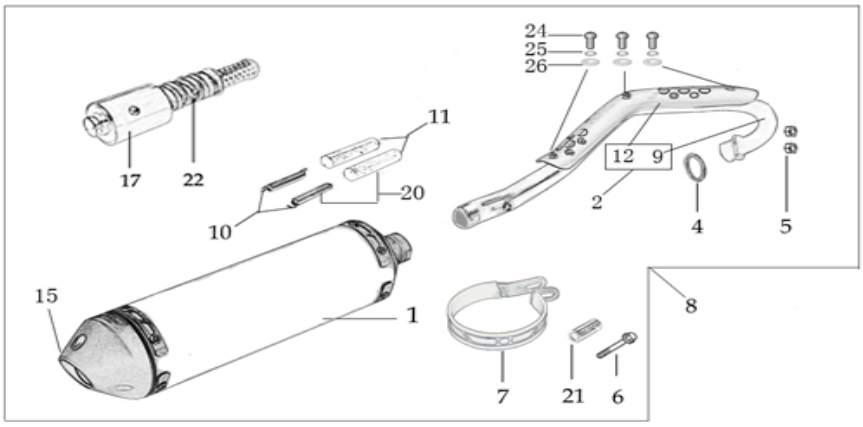

N	Ref.	Description	Français	Qty/Bike	MODEL	
1	YC110-13014-02	YCF Muffler SP2/SP3 (2 springs) 2015	silencieux YCF SP2/SP3 2015	1	SP215-17/SP315-17/BIGYF150MX17/FD190MX17	
2	YC110-1302-09	Exhaust pipe with protection plate Φ28/32mm SP 2015	collecteur avec plaque Φ28/32mm SP 2015	1	SP115-17/SP215-17/SP315	
4	18291/152FMH	Exhaust pipe washer φ32×φ25.5×4	joint pot φ32×φ25.5×4	1	ALL BIKES2012-2017（BUT50A/50E）	
5	GB6170-M6-W	Hex flanged self locking nut M6	écrou M6	2	ALL BIKES	
6	GB5787-M8×50-W	Hex. Bolt with flanged M8x50	vis M8x50	1	P1251617/P1501617/SM1501617/SP215-17/SP315	
7	YC110-1307-03	Hoop for muffler YCF SPII/SPIII 2015（with FB13-8×14×35-W 1EA+GB5787-M8×60-W 1EA）	Attache silencieux YCF SPII/SPIII 2015 (DROIT)	1	SP215-17/SP315-17	

	YC110-1328-02	Support of muffler hoop 2016		1	SP21617/SP31617	
	YC110-1404-01	Rubber plug Hoop for muffler Φ8.2Φ20.2×9mm BLACK		1	SP215-17/SP315-17/BIGYF150MX17/FD190MX17	
	FB13-10×15×25-W	Muffler Hoop spacer Φ10×Φ15×25mm	Entretoise attache silencieux Φ10×Φ15×25mm	1	P1251617/P1501617/SM1501617/SP215-17/SP315	
8	YC110-139-03	Muffler& Exhaust pipe assy YCF SPII/SPIII 2015	Echapement complet YCF CRD 94db SPII/SPIII 2015	1	SP215-17/SP315	
10	YC110-13-202	muffler spring Φ6.5×Φ9×25mm	ressort pot Φ6.5×Φ9×25mm	2	SP215-17/SP315/BIGYF150MX17	L=25mm
11	YC110-138	rubber for muffler spring	caoutchouc ressort pot	2	ALL BIKES2012-17(BUT50A)	
12	YC110-1312-01	SPI / SPII / SPIII protection for exaust pipe 2013	grille pot SPI / SPII / SPIII 2013	1	SP113-1617/SP213-1617/SP313-15	
15	YC110-13-35	Muffler end cap SPII 2015	Emout silencieux SPII 2015	1	SP215-17/SP315-17/BIGYF150MX17/FD190MX17	
17	YC110-13-303	Noise reducer SP2/SP3 2015	Bride de pot YCF SP2/SP3 2015	1	SP215-17/SP315-17/BIGYF150MX17/FD190MX17	
20	YC110-13-22	muffler spring with rubber SP 2015	ressort pot avec le caoutchouc SP 2015	2	SP215-17/SP315/BIGYF150MX17	L=25mm
24	GB70.2-M6×10-Cr	Plus screw M6×10	vis M6×10	3	ALL BIKES2013-17	
25	GB93-Φ6-W	Standard spring washer φ6	rondelle φ6	3	ALL BIKES2013-17	
26	GB97-Φ6-W	flat washer φ6	rondelle φ6	3	ALL BIKES2013-17	

Seat & Plastic kit

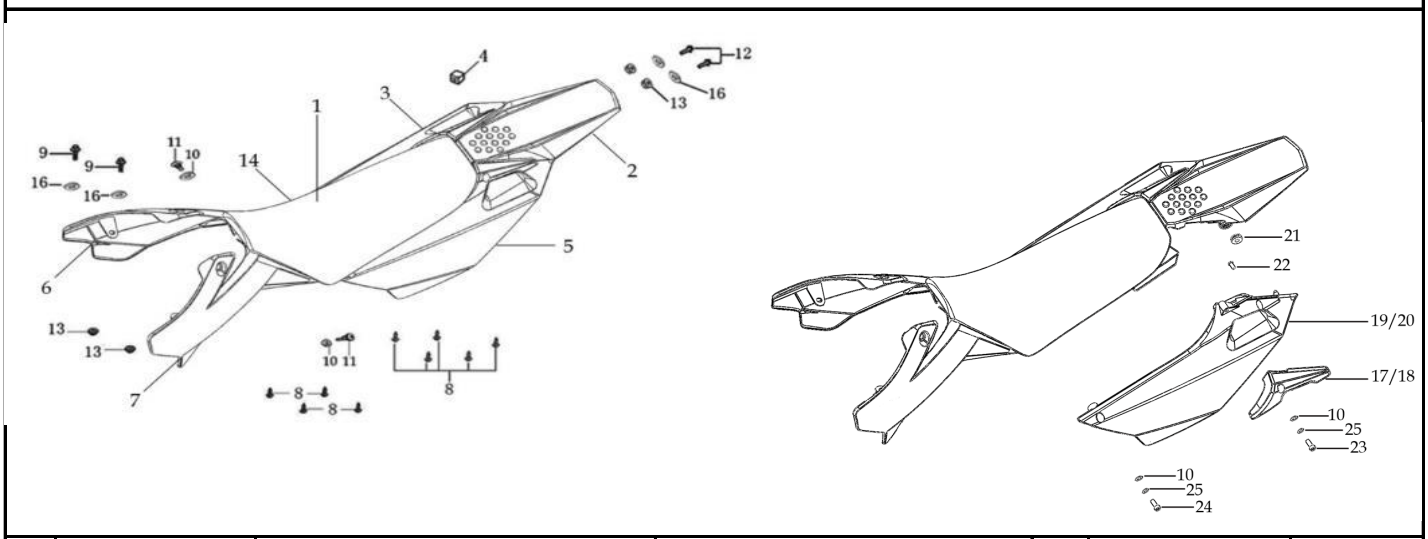

N	Ref.	Description	Français	Qty/ Bike	MODEL	

1	YC110-1401-15	YCF Seat assy L=510mm 2018	Selle SP 2018	1	SP218	
2	YC110-14-018BK	YCF Rear fender 2016 BLACK with YC110-1404-01 2EA	Garde boue arrière YCF 2016 NOIR		NEW 2018 P12517/P15017/SP117/SP217/SP317	
3	YC110-14-028BK	YCF right side plastic assy 2016 BLACK	Plaque latérale droite YCF 2016 NOIR		NEW 2018 P12517/P15017/SP117/SP217/SP317	
17	YC110-1428-01BK	YCF Handle for right side plastic 2016 BLACK	Paire de Poignees Droite pour Plaque Laterales YCF 2016	1	P1251617/P1501617/SM1501617/SP1617	
19	YC110-1419-01-BK	YCF right side plastic 2016 BLACK	Plaque latérale droite YCF 2016 NOIR		NEW 2018 P12517/P15017/SP117/SP217/SP317	
5	YC110-14-048BK	YCF left side plastic assy 2016 BLACK	Plaque laterale gauche YCF 2016 NOIR		NEW 2018 P12517/P15017/SP117/SP217/SP317	
18	YC110-1429-01BK	YCF Handle for left side plastic 2016 BLACK	Paire de Poignees Gauche pour Plaque Laterales YCF 2016	1	P1251617/P1501617/SM1501617/SP1617	
20	YC110-1420-01-BK	YCF left side plastic 2016 BLACK	Plaque laterale gauche YCF 2016 NOIR		NEW 2018 P12517/P15017/SP117/SP217/SP317	
21	YC110-1404-01	Cushion for side plastic Φ8.2Φ20.2×9mm 2016	caoutchouc plaque laterale Φ8.2Φ20.2×9mm 2016	2	P11251617/P1501617/SP11617/SP21617/SP31617/SM1501617	
4	YC110-14-03	Cushion for right side plastic	caoutchouc plaque laterale droite	1	ALL BIKES	
22	GB70.2-M5×12-Cr	Plus screw M5X12	vis M5X12	2	P11251617/P1501617/SP11617/SP21617/SP31617/SM1501617	
23	GB70-M6×12-Cr	Hex. Bolt M6x12	vis M6x12	2	P11251617/P1501617/SP11617/SP21617/SP31617/SM1501617	
24	GB70-M6×16-Cr	Hex. Bolt M6x16	vis M6x16	2	P11251617/P1501617/SP11617/SP21617/SP31617/SM1501617	
25	GB97-Φ6-W	flat washer φ6	rondelle φ6	4	P11251617/P1501617/SP11617/SP21617/SP31617/SM1501617	
10	YC110-02-13	Rubber washer Φ6×Φ14×3mm	joint caoutchouc Φ6×Φ14×3mm	4	P11251617/P1501617/SP11617/SP21617/SP31617/SM1501617	
6	YC110-14-059-BK	Right shroud SP 2017 BLACK	Ouie radiateur droite SP 2017 NOIR	1	SP117/SP217/SP317	
	YC110-1432-01-BK	Right side shroud Upper part SP 2017 BLACK		1	SP117/SP217/SP317	
	YC110-1434-01-BK	Right side shroud Lower part SP 2017 BLACK		1	SP117/SP217/SP317	
7	YC110-14-069-BK	Left side shroud SP 2017 BLACK	Ouie radiateur gauche SP 2017 NOIR	1	SP117/SP217/SP317	
	YC110-1433-01-BK	Left side shroud Upper part SP 2017 BLACK		1	SP117/SP217/SP317	

	YC110-1435-01-BK	Left side shroud Lower part SP 2017 BLACK		1	SP117/SP217/SP317	
	GB819-M4×10-W	Plus screw M4×10	vis M4×10	8	SP117/SP217/SP317	
8	GB845-ST4.8×16-G	Screw for plastic kit ST4.8x16	vis plastique ST4.8x16	6	ALL BIKES2012-17(BUT BIGY)	
8	GB845-ST4.8×20-G	Screw for plastic kit ST4.8x20	vis plastique ST4.8x20	1	P88s13-15/P12513-17/P15013-17/SM15013-17/SP113-17/SP213-17/SP313-17	
9	GB5787-M6×20-W	hex. Bolt with flanged M6x20	vis M6x20	2	ALL BIKES2012-17(BUT BIGY)	
10	YC110-02-13	Rubber washer Φ6×Φ14×3mm	joint caoutchouc Φ6×Φ14×3mm	2	ALL BIKES2012-17	
11	FB5787-M5×12-W	hex. Bolt with flanged M5×12	vis M5x12	2	ALL BIKES2012-17	
11	GB96-Φ5-W	flat washer Φ5×Φ12	rondelle Φ5×Φ12	2	ALL BIKES2015-17	
12	GB5787-M6×20-B	hex. Bolt with flanged M6x20 BLACK	vis M6x20 NOIR	2	ALL BIKES2015-17	
14	YC110-1414-03	YCF seat cover 2018	Housse selle YCF 2018	1	SP218	
16	YC110-03-01	Rubber washer Φ6×Φ18×4mm	joint caoutchouc Φ6×Φ18×4mm	4	ALL BIKES2012-17	
16	GB96-Φ6	flat washer φ6	rondelle φ6	4	ALL BIKES2012-17	

ELECTRIC

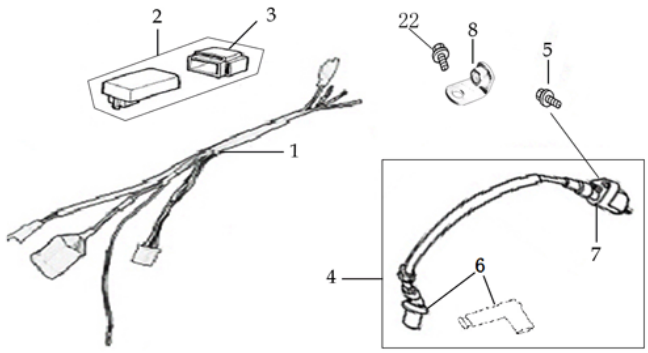

N	Ref.	Description	Français	Qty/Bike	MODEL	
1	YC110-1501-11	Wire harness Waterproof P125 2017	Faisceaux éléctrique ETANCHE P125 2017	1	F125L17/F125s17/P12517/P15017/SP117/SP217/SM17/BIGY125MX17/150MX17/F150MX17	
2	YC110-1503	CDI Ignitor assy.125cc	CDI 125cc	1	F125L1617/F150L17/F12512-16/F125s12-17/F125se15-17/P12513-15/P15013-17/SM12-17/SP112-17/SP212-17	
3	YC110-1501-03	Ignitor rubber	caoutchouc cdi	1	ALL BIKES2012-17（BUT50A/SP3/BIGYFD190MX）	
4	YC110-1504-02	Ignitor coil L=240mm	bobine haute tension L=240mm	1	F12512-16/F125s12-17/F125se15-17/P88s12-15/P12513-17/P15013-17/SM12-17/SP114-17/SP214-17	
5	GB5787-M6×20	Hex. Bolt with flanged M6x20	vis M6x20	1	ALL BIKES2013-17(BUT50A/SP3)	

6	YC110-1505	anti interference red	anti parasite rouge	1	ALL BIKES2012-2017（BUT50A/50E/SP3/BIGYFD190MX)	
7	YC110-1504	Ignitor coil	bobine haute tension	1	ALL BIKES2012-2017（BUT50A/50E/SP3/BIGYFD190MX)	
8	YC110-1506	The Ignitor coil stents BLACK	Support Bobine Haute tension	1	SP113-17/SP213-17/BIGY125MX17/150MX17/F150MX17	17mm 23mm
22	GB5787-M6×16-W	Hex. Bolt M6x16	vis m6x16	1	SP113-17/SP213-17/BIGY125MX17/150MX17/F150MX17	

Frame

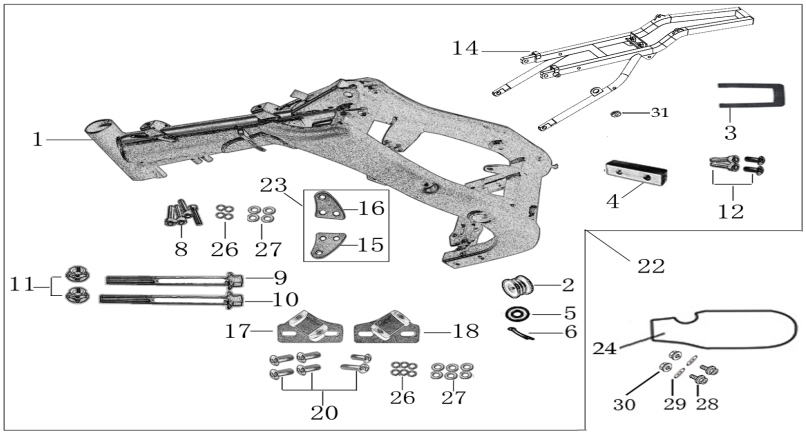

N	Ref.	Description	Français	Qty/Bike	MODEL	
1	YC110-181-05-BK	Chromely frame body SPI / SPII / SPIII 2015 BLACK	Cadre chromolly SPI / SPII / SPIII 2015 NOIR	1	SP115-17/SP215-17/SP315-17	
2	YC110-2201	YCF Chain tensioner component	roulette chaine YCF	1	ALL BIKES2011-17（BUT50A）	
5	GB97-Φ10-W	Flat washer φ10x17x2	rondelle φ10x17x2	1	ALL BIKES2014-17（BUT50A）	
6	GB91-Φ2×25-W	cotter pin φ2.0×25	goupille φ2.0×25	1	ALL BIKES2012-17（BUT50A）	
15	YC110-16-033-BK	frame engine pads left SPI/SPII/SPIII BLACK	patte de cadre gauche SPI/SPII/SPIII NOIRE	1	SP113-17/SP212-17/SP312-17	
16	YC110-16-043-BK	frame engine right left SPI/SPII/SPIII BLACK	patte de cadre droite SPI/SPII/SPIII NOIRE	1	SP113-17/SP212-17/SP312-17	
	YC110-0834-01	Nord Lock M for Frame pads	Nord Lock Pattes de cadre	6	NEW 2018 SP218/SP318/BIGYF15018/FD19018/ZE19018	
8	GB70-M8×20	Hex. Bolt with flanger M8x20	vis boucle arriere M8x20	4	P88s13-15/P12513-17/P15013-17/SP113-17/SP213-17/SP313-17/SM15013-17	
26	GB93-Φ8-W	washer φ8	rondelle φ8	4	P88s13-15/P12513-17/P15013-17/SP13-17/SM15013-17	

27	GB97-Φ8-W	Flat washer Φ8	rondelle Φ8	4	P88s13-15/P12513-17/P15013-17/SP13-17/SM15013-17	
9	GB5787-M8×130-W	Hex. Bolt with flanger face M8×130	vis M8×130	1	SP113-17/SP213-17/SP313-17	
9	GB5787-M8×105-W	Hex. Bolt with flanger M8x105	vis M8x105	1	P88s13-16/P88se15-17/P12513-16/F125s13-17/F125se15-17/SM125s13-17/P88s13-15/P12513-17/P15013-17/SM15013-17/SP13-17	
10	GB6187-M8-W	Self locking nut M8	ecrou M8	2	ALL BIKES	
14	YC110-1614-15-BK	STEEL rear frame part SP1/SP2 2017 BLACK with YC110-1404-01 2EA	Boucle arriere de cadre ACIER SP1/SP2 2017 NOIR	1	SP117/SP217	
	YC110-0834-01	Nord Lock M8 for Suframe	Nord Lock Boucle arriere	4	NEW 2018 SP218/SP318/BIGYF15018/FD19018/ZE19018	
	YC110-1633-01	Rubber plug for Rear frame part BIGY 2017		1	P12517/P15017/SM15017/SP117/SP217/BIGY2017	
31	YC110-1404-01	Rubber for Subframe	Caoutchouc pour Boucle Arriere	2	P1251617/P1501617/SM1501617/SP1617	
12	GB70-M8×20	Hex. Bolt M8X20	vis M8x20	2	P88s13-15/P12513-17/P15013-17/SP113-17/SP213-17/SP313-17/SM15013-17	
12	GB70.2-M8×20	screw M8x20	vis M8x20	2	SP113-17/SP213-17/SP313-17	
17	YC110-16-051-BK	foot pegs support left SPI/SPII/SPIII BLACK	support repose pied gauche SPI/SPII/SPIII NOIR	1	SP113-17/SP212-17/SP312-17	
18	YC110-16-055-BK	foot pegs support right SPI/SPII/SPIII BLACK	support repose pied droite SPI/SPII/SPIII NOIR	1	SP113-17/SP212-17/SP312-17	
20	GB70.2-M8×25	screw M8x25	vis M8x25	4	SP113-17/SP212-17/SP312-17	
20	GB70.2-M8×50-Cr	screw M8x50	vis M8x50	1	SP113-17/SP213-17/SP313-17	
20	GB70.2-M8×25-Cr	screw M8x25	vis M8x25	1	SP113-17/SP213-17/SP313-17	
26	GB93-Φ8-W	Spring washer Φ8mm	rondelle Φ8mm	6	SP113-16/SP213-16/SP313-16	
27	GB97-Φ8-W	flat washer φ8×16×1	rondelle φ8×16×1	6	SP113-16/SP213-16/SP313-16	
21	YC110-171-03-BK	complète frame SP2 2016 BLACK	cadre complet SP2 2016 NOIR	1	SP11617/SP21617	
22	YC110-16-066-BK	set of engine pads Black SPI/SPII/SPIII（with GB97-Φ8-W 4EA+GB70-M8×20 4EA+GB93-Φ8-W 4EA）	jeu de patte de cadre Noir SPI/SPII/SPIII	1	SP113-17/SP212-17/SP312-17	

24	YC110-0460-01	Rear shock absorber rubber protection 2016	Bavette caoutchouc 2016	1	SP1617/BIGY2017	
28	GB5787-M6×30-W	Hex. Bolt M6×30	vis M6×30	2	SP113-17/SP213-17/SP313-17	
29	GB96-Φ6-W	Washer φ6×φ18mm	Rondelle φ6×φ18mm	2	SP113-17/SP213-17/SP313-17	
30	GB6187-M6-W	Self-locking Nut M6	écrou M6	2	SP113-17/SP213-17/SP313-17	

FRONT SPROCKET PROTECTION

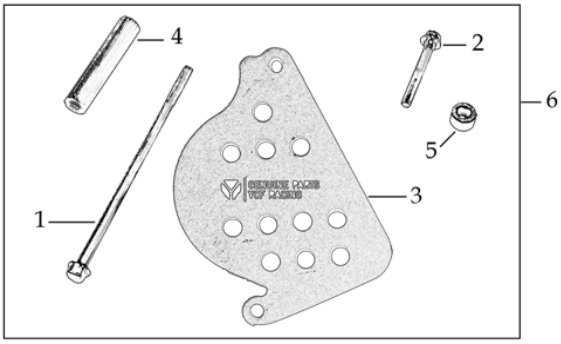

N	Ref.	Description	Français	Qty/ Bike	MODEL	
1	GB5787-M6×120-Cr	Hex. Bolt with flanger M6×120 Chrome	vis M6×120	1	ALL BIKES2012-17（BUT50A/F88se/F125se/LITE/SP3）	
2	GB5787-M6×40-Cr	Hex. Bolt with flanger M6×40 Chrome	vis M6×40	1	ALL BIKES2012-17（BUT50A/F88se/F125se/LITE/SP3）	
3	YC110-24-074-BK	Aluminium chain protection 2013 PILOT / FACTORY BLACK	Protection PSB Aluminium 2013 PILOT / FACTORY NOIR	1	P88s13-15/P12513-17/P15013-17/SP113-17/SP213-17/SM15013-17	
4	FB13-7×12×55-W	bushing Φ7xΦ12x55	entretoise Φ7xΦ12x55	1	ALL BIKES2012-17（BUT50A/F88se/F125se/LITE/SP3）	
5	FB13-7×12×7-W	bushing Φ7xΦ12x7	entretoise Φ7xΦ12x7	1	ALL BIKES2012-17（BUT50A/F88se/F125se/LITE/SP3）	
6	YC110-253BK	Complete Aluminium chain protection 2013 PILOT / FACTORY 2013 BLACK	Protection complète PSB Aluminium 2013 PILOT / FACTORY 2013 NOIRE	1	P88s13-15/P12513-17/P15013-17/SP113-17/SP213-17/SM15013-17	

GRAPHICS

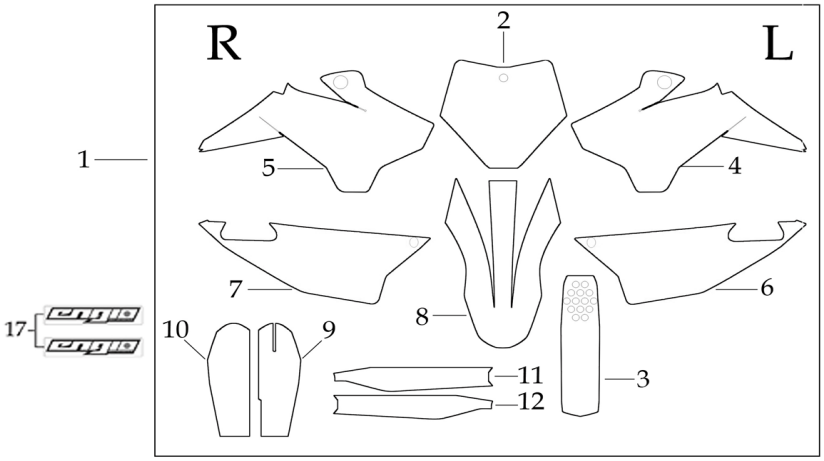

N	Ref.	Description	Français	Qty/ Bike	MODEL	
1	KDSP22018	SP2 complete graphic kit 2018	Kit deco complet SP2 2018	1	NEW 2018 SP218	
2	YC110-2502-14	SP2 Front plate graphic 2018	Sticker Plaque avant SP2 2018	1	SP218	
3	YC110-2503-14	SP2 Rear mudguard graphic 2018	Sticker GB Arriere SP2 2018	1	SP218	
4	YC110-2504-14	SP2 Left shrouder graphic 2018	Sticker Ouie gauche radiateur SP2 2018	1	SP218	
	YC110-2520-14	Left side shroud Lower part graphic SP2/SP3 2018		1	SP217/SP318	
5	YC110-2505-14	SP2 Right shrouder graphic 2018	Sticker Ouie droite radiateur SP2 2018	1	SP218	
	YC110-2521-14	Right side shroud Lower part graphic SP2/SP3 2018		1	SP218/SP318	
6	YC110-2506-14	SP2 Left side plate graphic 2018	Sticker Plaque laterales gauche SP2 2018	1	SP218	
7	YC110-2507-14	SP2 Right side plate graphic 2018	Sticker Plaque laterales droite SP2 2018	1	SP218	
8	YC110-2508-14	SP2/SP3150 front fender Front fender graphic 2018	Sticker GB Avant SP2/SP3150 2018	1	SP218/SP315018	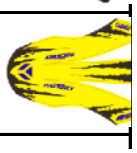
9	YC110-2509-14	SP2 Front left shock protection graphic 2018	Sticker Protection gauche fourche SP2 2018	1	SP218	
10	YC110-2510-14	SP2 Front right shock protection graphic 2018	Sticker Protection droit fourche SP2 2018	1	SP218	
11	YC110-32-107	SPII left swing arm protection graphic 2015	Sticker Protection gauche bras oscillent SPII 2015	1	SP215-17	

12	YC110-32-117	SPII right swing arm protection graphic 2015	Sticker Protection droit bras oscillent SPII 2015	1	SP215-17	
	FGKFP-SP2R18	Right frame sticker SPII 2018	Sticker de cadre droit SPII 2018	1	NEW 2018 SP218	
	FGKFP-SP2L18	Left frame sticker SPII 2018	Sticker de cadre droit SPII 2018	1	NEW 2018 SP218	
	YC110-1909	Sticker FACTORY Shock Absorber	Autocollant FACTORY Amortisseur	1	ALL BIKES2013-17（BUT50A/SP3/BIGYFD190 MX）	
	YC110-1910	GAS TANK STICKER	STICKER RESERVOIR	1	ALL BIKES2013-17(BUT50A/BIGY）	
	YC110-1911	Motocross Rims Sticker BLUE	Sticker Jantes Motocross BLEU	4	SP213-17/SP313-17	
	YC110-1912	YCF Air box Sticker	Sticker Boite a Air YCF	1	SP113-17/SP213-17/SP313-17	
	YC110-1901	Sticker Chain	Autocollant Chaine	1	ALL BIKES2013-17	
	YC110-1902	Sticker Tire	Autocollant Pression Pneu	1	ALL BIKES2013-17	
	YC110-1903	Sticker Warning OIL Level	Autocollant Attention Niveau Huile	1	ALL BIKES2013-17	
	YC110-1904	Sticker Rear Mudguard	Autocollant garde boue arriere	1	ALL BIKES2013-17(BUT50A)	
	YC110-1905	Sticker CE	Autocollant CE	1	ALL BIKES2013-17	
	YC110-1906	Warning sticker	Sticker Attention	1	ALL BIKES2013-17	
	YC110-1907	Warning Sticker Transport	Sticker Caisse Avertissement Transport	1	ALL BIKES2013-17	
	YC110-1908	Warning Sticker Shosk Absorber	Sticker Avertissement Amortisseur	1	ALL BIKES2013-17	
			ENGINES			
	MOTEUR150-02	ENGINE 150-2 2015	M0TEUR DTE150 2015	1	SP215-17	
	17311-2	Inlet Pipe,Pro CP 2012	PIPE ADMISSION CP 2012	1	SP113-17/SP213-17	
	YC110-0834-01	Nord Lock M8 for Engine srews	Nord Lock Vis moteur	4	NEW 2018 SP218/SP318/BIGYF15018 /FD19018/ZE19018	
	17332	carburettor paper gasket Φ28	joint papier carburateur Φ28	1	ALL BIKES2015-17 (BUT50A/SP3190)	

	17332/152FMH01	Intake Gasket	JT PAPIER PIPE ADMISSION	1	ALL BIKES2015-17 (BUT50A/SP3190)	
	F00C039	carburettor isolating gasket Φ27.5	joint plastique carburateur Φ27.5	1	ALL BIKES2015-17 (BUT50A/SP3190)	
	11411/152FMH	Crankcase Cover, LH	CARTER ALLUMAGE	1	ALL BIKES2015-17 (BUT50A/SP3190)	
	YC140-27600SI	STEEL KICK YCF 2015 BIG HOLE	KICK ACIER 2015 GROS DIAMETRE SILVER	1	P15015-17/SM15015-17/SP15-17	
	24700/152FMH	Gearshift Pedal	SELECTEUR	1	F88se15-17/F12513-16/F125se15-17/P12513-17/P15013-17/SM15013-17/SP13-17	
			CARBU			
	YC110-38424	Carburetor RSP/SM150/C/CP/FP 2012 with main jet 107.5 and slow jet 15	Carburateur RSP/SM150/C/CP/FP 2012 GICLEUR 107.5 GICLEUR 15	1	P15013-17/SM15013-17/SP113-17/SP213-17/SP315013-15	
	GICLEUR105	main jet 105	GICLEUR 105	1	SP113-17/SP213-17	
	YC110-3847-01	Carburetor spring Φ17×70mm	Ressort Carbu	1	F12513-16/F125s13-17/F125se15-17/P12513-17/P15013-17/SP113-17/SP213-17/SP315013-15/SM13-17	

			CARTONS - CAISSES MOTOS			
	YC110-CARTON-CP	BIKE BOX CLASSIC 1520×380×840mm	CARTON EMBALLAGE MOTO CLASSIC	1	CP12/FP12/P12515-17/P15015-17/SM15015-17/SP113-17/SP213-17/SP313-15	
	YC110-FOAMBOX	Foam box 420×340×160mm	Cale PS	1	ALL BKIES2014-17	
	YC110-FILM	Protective film for seat 600×600×0.02mm	Protection plastique de Selle	1	ALL BKIES2014-17	
			CATALOGUES - FICHES MOTOS - FICHES STICKER			
	YC110-0700-01	Accessory tools	Trousse a outils	1	ALL BIKES2013-17	
	YC110-0700-0201	Owner manual 2015	Manuel Utilisation 2015	1	ALL BIKES2013-17	
	YC110-0700-0401	Vin Plate 2015	Plaque Vin 2015	1	ALL BIKES2013-17	

	YC110-0700-03	A4 sheet assy	Fiche A4	1	ALL BIKES2013-17	
	YC110-0700-08	A4 sheet main jet	Fiche A4 carburation	1	SP213-17/SP315013-15	
	GICLEUR115	main jet 115	GICLEUR 115	1	SP213-17	

B